Compal Confidential

ULC AMD M/B LA-A996P DIS Schematics Document

AMD APU Beema/Kabini FT3 + ATI SUN LE + DDR3

Project Code : ZSO51

2014/02/08

PV Rev. 4.0

www.laptop-schematics.com

Security Classification	Compal Secret Data			Compal Electronics, Inc.
Issued Date	2013/02/26	Deciphered Date	2015/07/08	Title: COVER PAGE
THIS SHEET OF ENGINEERING DRAWING IS THE PROPRIETARY PROPERTY OF COMPAL ELECTRONICS, INC. AND CONTAINS CONFIDENTIAL AND TRADE SECRET INFORMATION. THIS SHEET MAY NOT BE TRANSFERED FROM THE CUSTODY OF THE COMPETENT DIVISION OF R&D DEPARTMENT EXCEPT AS AUTHORIZED BY COMPAL ELECTRONICS, INC. NEITHER THIS SHEET NOR THE INFORMATION IT CONTAINS MAY BE USED BY OR DISCLOSED TO ANY THIRD PARTY WITHOUT PRIOR WRITTEN CONSENT OF COMPAL ELECTRONICS, INC.				Size: C; Document Number: LA-A996P; Rev: 0.1
				Date: Monday, February 17, 2014; Sheet 1 of 46

Compal Confidential

Model Name : AMD Beema/Kabini

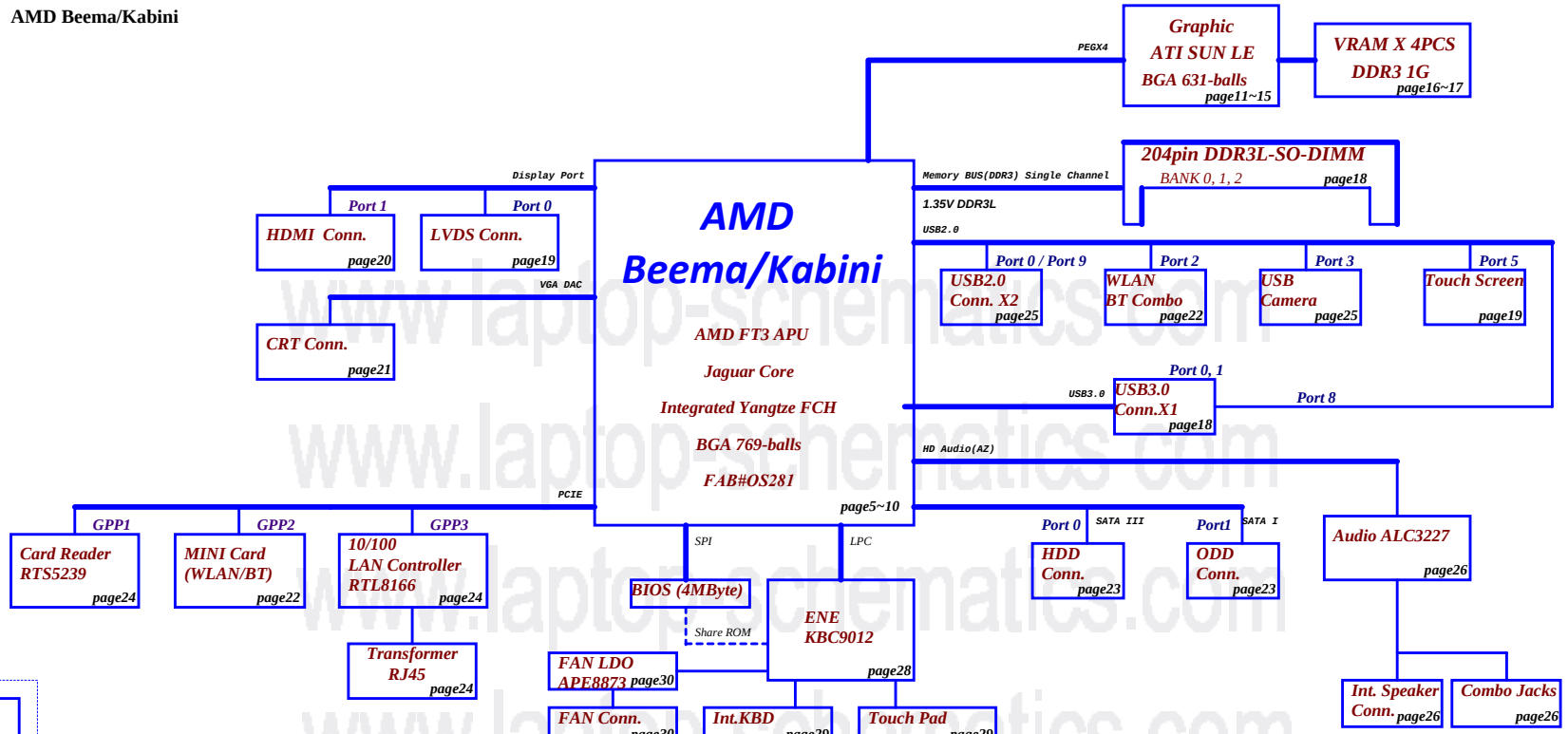

www.laptop-schematics.com

Security Classification	Compal Secret Data		Compal Electronics, Inc.
Issued Date	2013/02/26	Deciphered Date 2015/07/08	Title: BLOCK DIAGRAMS

THIS SHEET OF ENGINEERING DRAWING IS THE PROPRIETARY PROPERTY OF COMPAL ELECTRONICS, INC. AND CONTAINS CONFIDENTIAL AND TRADE SECRET INFORMATION. THIS SHEET MAY NOT BE TRANSFERED FROM THE CUSTODY OF THE COMPETENT DIVISION OF R&D DEPARTMENT EXCEPT AS AUTHORIZED BY COMPAL ELECTRONICS, INC. NEITHER THIS SHEET NOR THE INFORMATION IT CONTAINS MAY BE USED BY OR DISCLOSED TO ANY THIRD PARTY WITHOUT PRIOR WRITTEN CONSENT OF COMPAL ELECTRONICS, INC.

Size: Custom	Document Number: LA-A996P		Rev: 0.1
Date: Monday, February 17, 2014	Sheet 2 of 46		

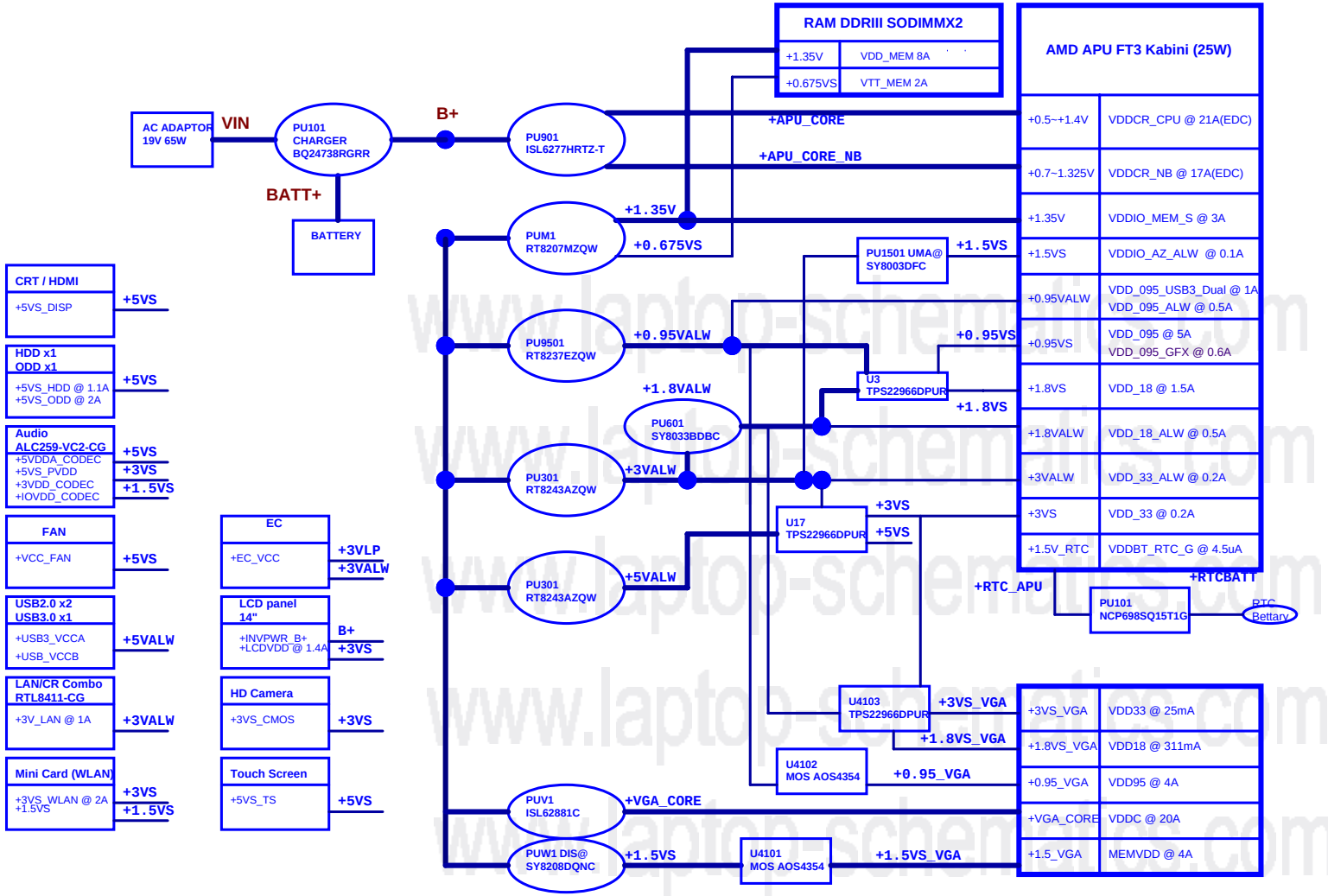

Security Classification	Compal Secret Data			Compal Electronics, Inc.
Issued Date	2013/01/04	Deciphered Date	2015/01/04	Title: POWER MAP
				Size: C; Document Number: LA-A996P; Rev: 0.1
				Date: Monday, February 17, 2014; Sheet 3 of 46

THIS SHEET OF ENGINEERING DRAWING IS THE PROPRIETARY PROPERTY OF COMPAL ELECTRONICS, INC. AND CONTAINS CONFIDENTIAL AND TRADE SECRET INFORMATION. THIS SHEET MAY NOT BE TRANSFERED FROM THE CUSTODY OF THE COMPETENT DIVISION OF R&D DEPARTMENT EXCEPT AS AUTHORIZED BY COMPAL ELECTRONICS, INC. NEITHER THIS SHEET NOR THE INFORMATION IT CONTAINS MAY BE USED BY OR DISCLOSED TO ANY THIRD PARTY WITHOUT PRIOR WRITTEN CONSENT OF COMPAL ELECTRONICS, INC.

Voltage Rails

Power Plane	Description	S0	S3	S5
VIN	Adapter power supply (19V)	ON	ON	ON
B+	AC or battery power rail for power circuit.	ON	ON	ON
+APU_CORE	Core voltage for APU	ON	OFF	OFF
+APU_CORE_NB	Voltage for On-die VGA of APU	ON	OFF	OFF
+0.95VALW	0.95V always on power rail	ON	OFF	OFF
+0.95VS	0.95V switched power rail	ON	OFF	OFF
+1.8VALW	1.8V always on power rail	ON	ON	ON*
+1.8VS	1.8V switched power rail	ON	OFF	OFF
+1.5V	1.5V power rail for APU and DDR	ON	ON	OFF
+1.5VS	1.5V switched power rail	ON	OFF	OFF
+0.75VS	0.75V switched power rail for DDR terminator	ON	OFF	OFF
+3VALW	3.3V always on power rail	ON	ON	OFF
+3VS	3.3V switched power rail	ON	OFF	OFF
+5VALW	5V always on power rail	ON	ON	ON
+5VS	5V switched power rail	ON	OFF	OFF
+RTC_APU	RTC power			

STATE \ SIGNAL	SLP_S3#	SLP_S5#	+VALW	+V	+VS	Clock
Full ON	HIGH	HIGH	ON	ON	ON	ON
S1(Power On Suspend)	HIGH	HIGH	ON	ON	ON	LOW
S3 (Suspend to RAM)	HIGH	HIGH	ON	ON	OFF	OFF
S4 (Suspend to Disk)	LOW	HIGH	ON	OFF	OFF	OFF
S5 (Soft OFF)	LOW	LOW	ON	OFF	OFF	OFF

UAPU1 BA4@
A4-6300
Part Number = SA00007OP20
S IC A32 A4-6300 AM6300ITJ44JB

UAPU1 R36410@
A8-6410 15W
Part Number = SA00007TQ20
AM6410ITJ44JB

UAPU1 R16410@
A8-6410 15W
Part Number = SA00007TQ10
AM6410ITJ44JB

UAPU1 BE2@
E2-6200
Part Number = SA00007OQ20
S IC A32 E2-6200 EM6200ITJ44JB 1.5G BGA

UAPU1 R36210@
A4-6210 R3 15W
Part Number = SA00007RA60
AM6210ITJ44JB

UAPU1 R16210@
A4-6210 R1 15W
Part Number = SA00007RA40
AM6210ITJ44JB

UAPU1 BE1@
E1-6050
Part Number = SA00007IQ50
S IC A32 E1-6050 ZM1332M2J2370 1.35G BGA

UAPU1 R36110@
E2-6110 R2 15W
Part Number = SA00007RB60
EM6110ITJ44JB

UAPU1 R16110@
E2-6110 R2 15W
Part Number = SA00007RB40
EM6110ITJ44JB

UAPU1 R36010@
E1-6010 R2 10
Part Number = SA00007RC60
EM6010IUJ23JB

UAPU1 R16010@
E1-6010 R2 10
Part Number = SA00007RC40
EM6010IUJ23JB

DAX
PCB
Part Number = DAZ14D00203
PCB LA-A996P REV4.0 M/B

ZZZ H@
HDMI
Part Number = RO0000003HM
PCB 102 LA-A996P REV0 M/B 2

UAPU1 E1R1@
E1-2100
Part Number = SA00006QX10
S IC A32 KABINI EM2100ICJ23HM 1G BGA769P

UAPU1 E1R3@
E1-2100
Part Number = SA00006QX60
S IC A32 KABINI EM2100ICJ23HM 1G BGA769P

UAPU1 A4R1@
A4-5000
Part Number = SA00006R410
S IC A4 SERIES AT1250IDJ23HM 1G BGA 769P

UAPU1 A4R3@
A4-5000
Part Number = SA00006R460
S IC A4 SERIES AT1250IDJ23HM 1G BGA 769P

UAPU1 E2R1@
E2-3800
Part Number = SA00007BX20
S IC A32 KABINI EM2100ICJ23HM 1G BGA769P

UAPU1 E2R3@
E2-3800
Part Number = SA00007BX60
S IC A32 KABINI EM2100ICJ23HM 1G BGA769P

UAPU1 A6R1@
A6-5200
Part Number = SA00006R350
S IC KABINI AM5200IAJ44HM 2G BGA769P APU

SMBus List

EC SMBus Port1 (+3VALW)

Device	Address	HEX
Smart Battery	0001 011X b	16H

EC SMBus Port2 (+3VS)

Device	Address	HEX
SB-TSI (APU)	1001 100X b	98H

APU SMBus Port0 (+3VS)

Device	Address	HEX
DDR DIMM2	1010 000Xb	A0H
DDR DIMM1	1010 001Xb	A2H
Mini Card (DNI)		

APU SMBus Port1(+3VALW)

Device	Address	HEX

BOM Structure Table

BOM Structure	BTO Item
@	Unpop
CONN@	Connector Part Control by ME
EMI@	EMI pop component
@EMI@	EMI unpop component
ESD@	ESD pop component
@ESD@	ESD Unpop component
PX@	GPU SUN LE Componet
8166@	10/100 LAN
8151@	Giga LAN
UMA@	UMA Componet
display@	display Componet
EDP@	EDP Componet
KLVDS@	Kabini LVDS Componet
BLVDS@	Beema LVDS Componet
Kabini@	Kabini Componet
Beema@	Beema Componet
LVDS@	LVDS Componet

APU POWER SEQUENCE

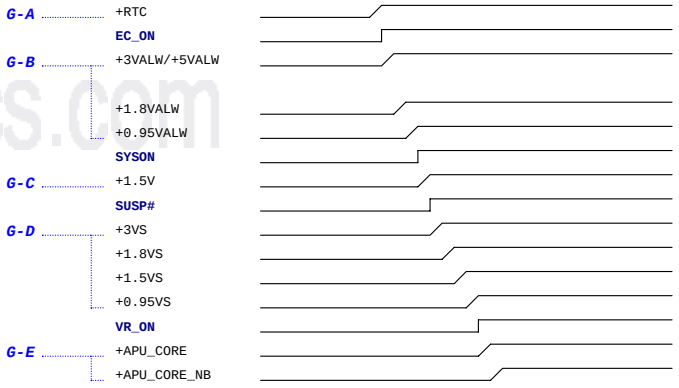

re check

www.laptop-schematics.com

Security Classification	Compal Secret Data		
Issued Date	2013/02/26	Deciphered Date	2015/07/08

THIS SHEET OF ENGINEERING DRAWING IS THE PROPRIETARY PROPERTY OF COMPAL ELECTRONICS, INC. AND CONTAINS CONFIDENTIAL AND TRADE SECRET INFORMATION. THIS SHEET MAY NOT BE TRANSFERED FROM THE CUSTODY OF THE COMPETENT DIVISION OF R&D DEPARTMENT EXCEPT AS AUTHORIZED BY COMPAL ELECTRONICS, INC. NEITHER THIS SHEET NOR THE INFORMATION IT CONTAINS MAY BE USED BY OR DISCLOSED TO ANY THIRD PARTY WITHOUT PRIOR WRITTEN CONSENT OF COMPAL ELECTRONICS, INC.

Compal Electronics, Inc.

Title: NOTES LIST

Size: B | Document Number: LA-A996P | Rev: 0.1

Date: Wednesday, March 26, 2014 | Sheet 4 of 46

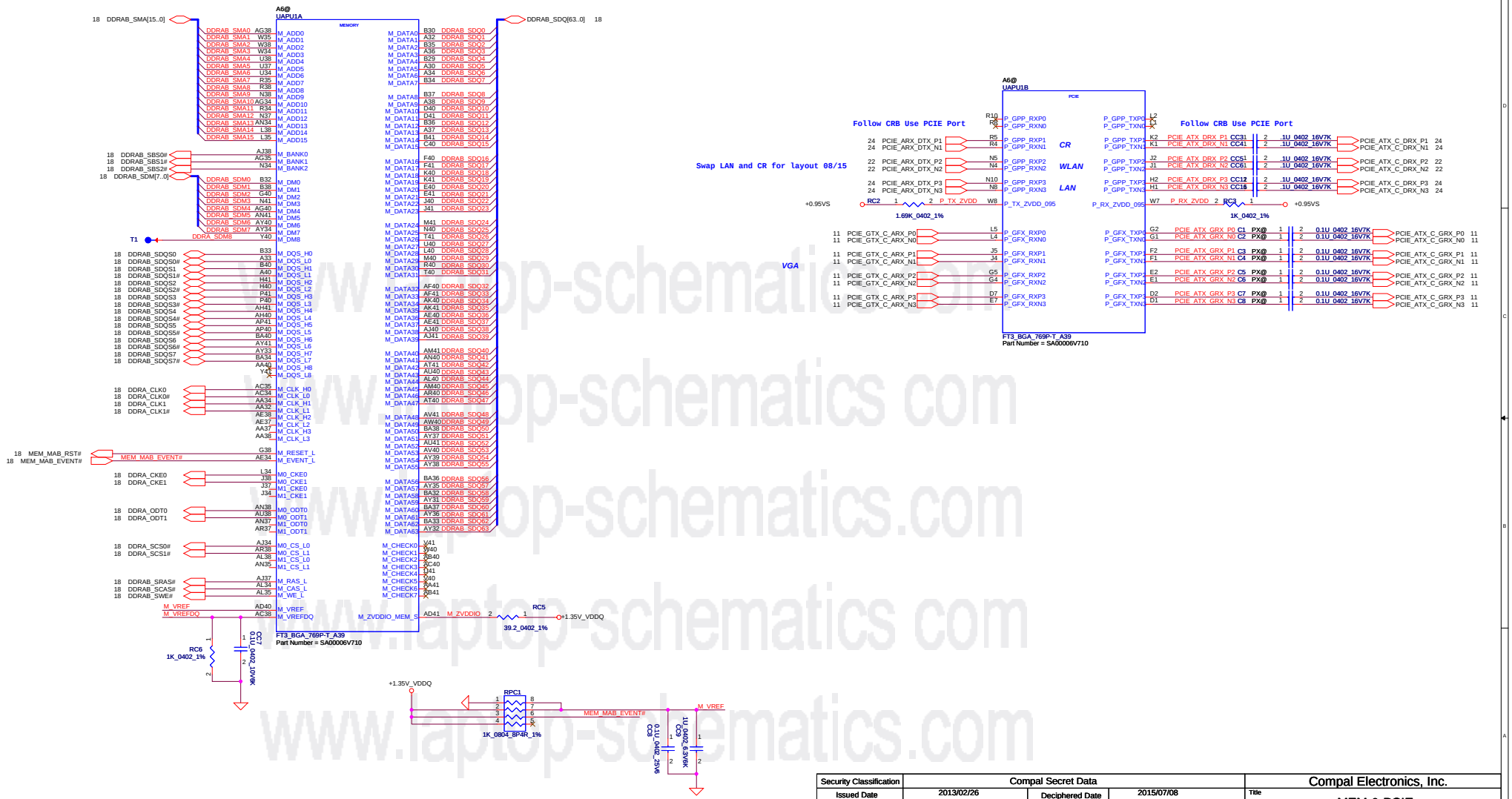

Security Classification	Compal Secret Data		
Issued Date	2013/02/26	Deciphered Date	2015/07/08

THIS SHEET OF ENGINEERING DRAWING IS THE PROPRIETARY PROPERTY OF COMPAL ELECTRONICS, INC. AND CONTAINS CONFIDENTIAL AND TRADE SECRET INFORMATION. THIS SHEET MAY NOT BE TRANSFERED FROM THE CUSTODY OF THE COMPETENT DIVISION OF R&D DEPARTMENT EXCEPT AS AUTHORIZED BY COMPAL ELECTRONICS, INC. NEITHER THIS SHEET NOR THE INFORMATION IT CONTAINS MAY BE USED BY OR DISCLOSED TO ANY THIRD PARTY WITHOUT PRIOR WRITTEN CONSENT OF COMPAL ELECTRONICS, INC.

Compal Electronics, Inc.

Title: MEM & PCIE

Size: Custom | Document Number: LA-A996P | Rev: 0.1

Date: Monday, February 17, 2014 | Sheet 5 of 46

www.laptop-schematics.com

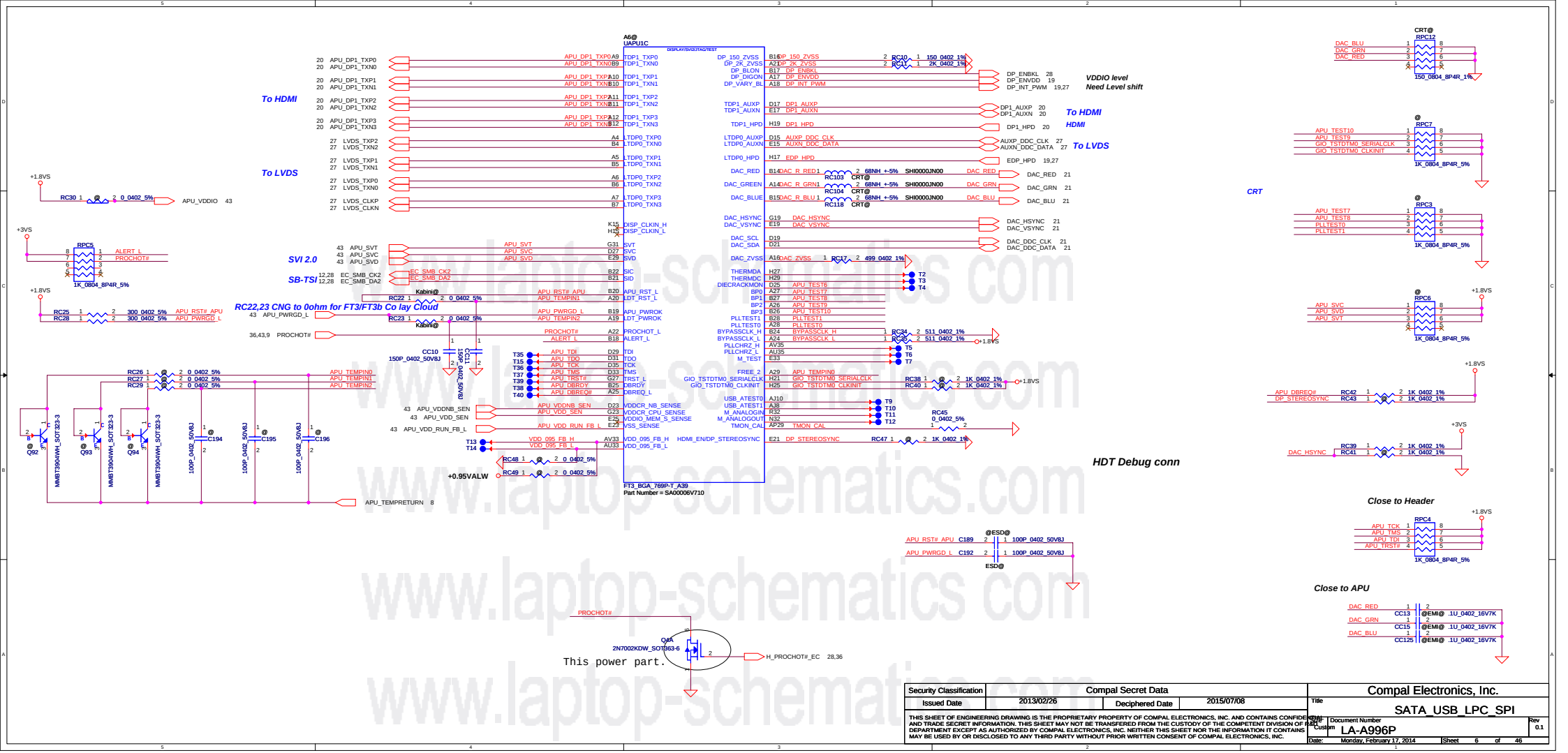

Security Classification	Compal Secret Data		
Issued Date	2013/02/26	Deciphered Date	2015/07/08

THIS SHEET OF ENGINEERING DRAWING IS THE PROPRIETARY PROPERTY OF COMPAL ELECTRONICS, INC. AND CONTAINS CONFIDENTIAL AND TRADE SECRET INFORMATION. THIS SHEET MAY NOT BE TRANSFERED FROM THE CUSTODY OF THE COMPETENT DIVISION OF R&D DEPARTMENT EXCEPT AS AUTHORIZED BY COMPAL ELECTRONICS, INC. NEITHER THIS SHEET NOR THE INFORMATION IT CONTAINS MAY BE USED BY OR DISCLOSED TO ANY THIRD PARTY WITHOUT PRIOR WRITTEN CONSENT OF COMPAL ELECTRONICS, INC.

Compal Electronics, Inc.

Title: SATA_USB_LPC_SPI

Size: Custom | Document Number: LA-A996P | Rev: 0.1

Date: Monday, February 17, 2014 | Sheet 6 of 46

www.laptop-schematics.com

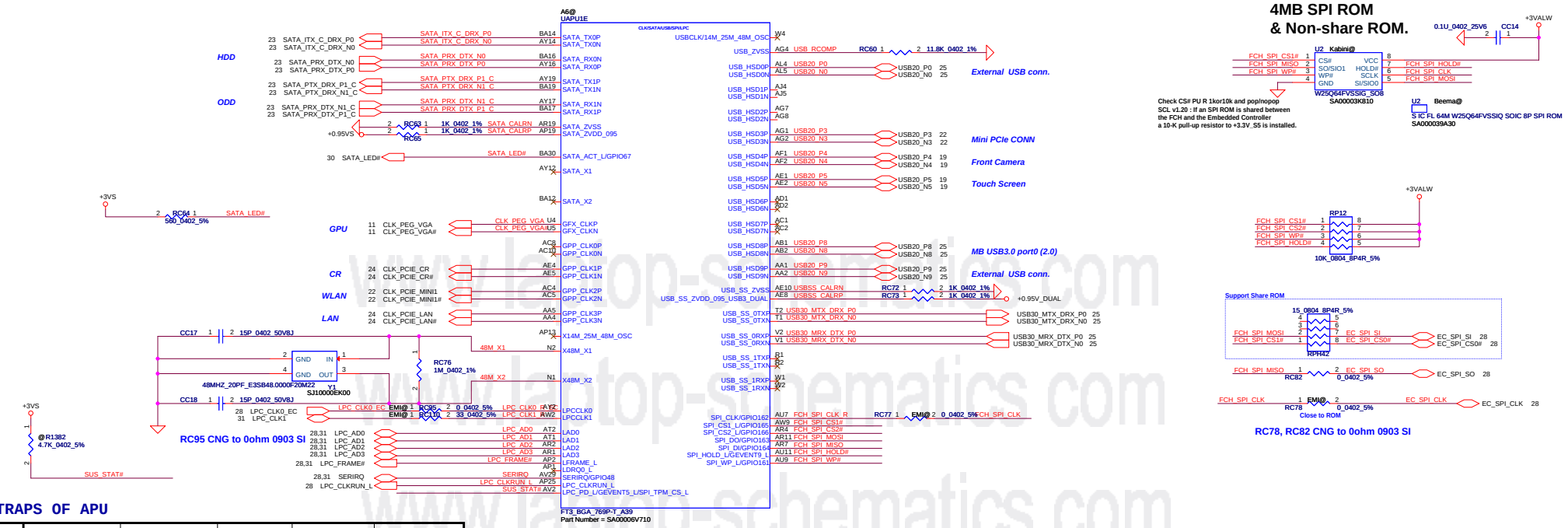

STRAPS OF APU

	LPC_FRAME#	LPC_CLK0_EC	LPC_CLK1	GEVENT2_L	RTC_CLK
H	SPI ROM (DEFAULT)	BOOT FAIL TIMER ENABLED	CLKGEN ENABLE (DEFAULT)	1.8V SPI ROM	NORMAL POWR UP/RESET TIMING (DEFAULT)
L	LPC ROM	BOOT FAIL TIMER DISABLED (DEFAULT)	CLKGEN DISABLED	3.3V SPI ROM (DEFAULT)	FAST POWER UP/RESET TIMING FOR SIMULATION

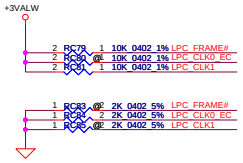

www.laptop-schematics.com

Security Classification	Compal Secret Data			Compal Electronics, Inc.
Issued Date	2013/02/26	Deciphered Date	2015/07/08	Title: SATA_USB_LPC_SPI

THIS SHEET OF ENGINEERING DRAWING IS THE PROPRIETARY PROPERTY OF COMPAL ELECTRONICS, INC. AND CONTAINS CONFIDENTIAL AND TRADE SECRET INFORMATION. THIS SHEET MAY NOT BE TRANSFERED FROM THE CUSTODY OF THE COMPETENT DIVISION OF R&D DEPARTMENT EXCEPT AS AUTHORIZED BY COMPAL ELECTRONICS, INC. NEITHER THIS SHEET NOR THE INFORMATION IT CONTAINS MAY BE USED BY OR DISCLOSED TO ANY THIRD PARTY WITHOUT PRIOR WRITTEN CONSENT OF COMPAL ELECTRONICS, INC.

Size	Document Number	Rev
Custom	LA-A996P	0.1

Date: Monday, February 17, 2014 Sheet 7 of 46

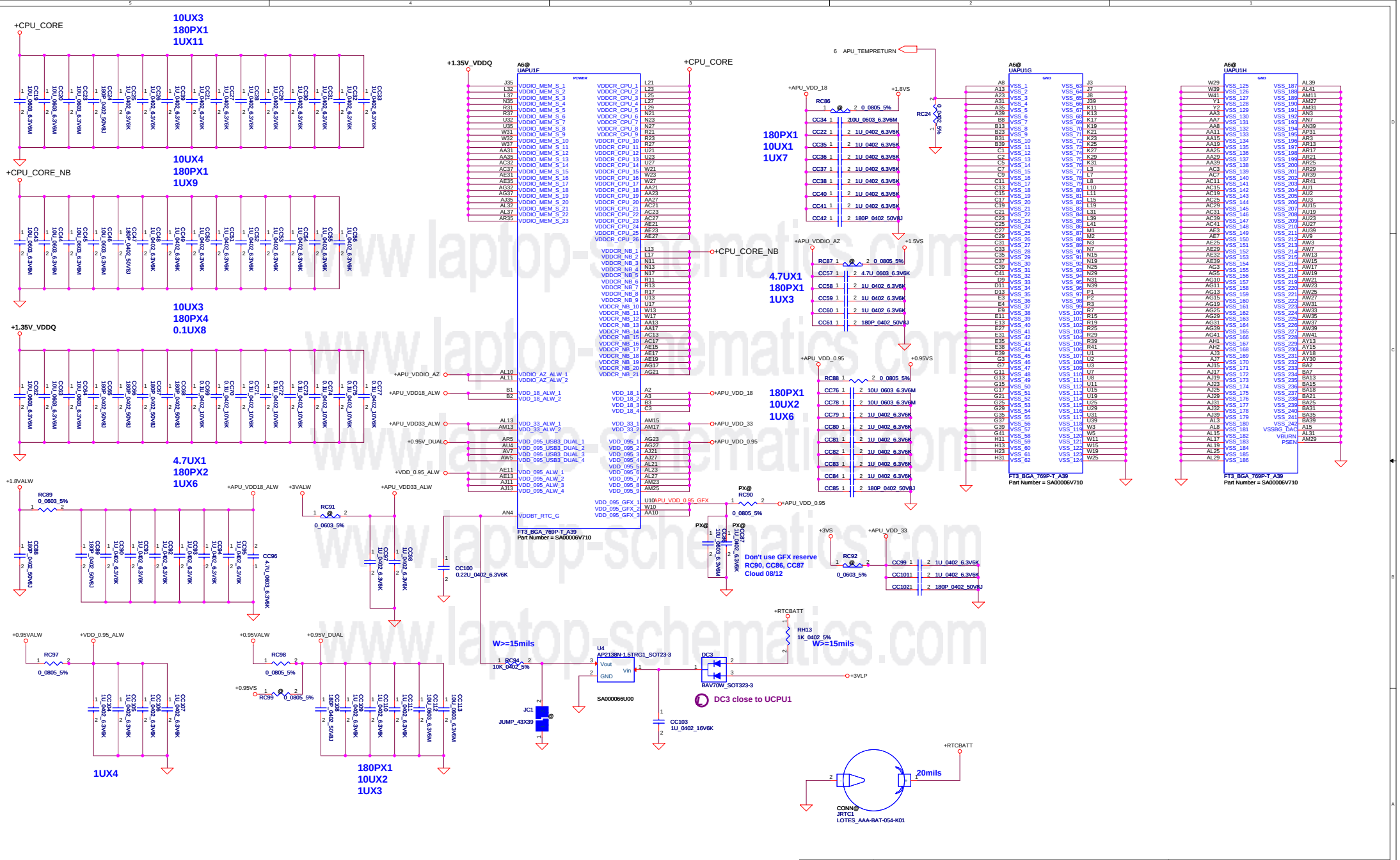

www.laptop-schematics.com

Security Classification	Compal Secret Data		
Issued Date	2013/02/26	Deciphered Date	2015/07/08

THIS SHEET OF ENGINEERING DRAWING IS THE PROPRIETARY PROPERTY OF COMPAL ELECTRONICS, INC. AND CONTAINS CONFIDENTIAL AND TRADE SECRET INFORMATION. THIS SHEET MAY NOT BE TRANSFERED FROM THE CUSTODY OF THE COMPETENT DIVISION OF R&D DEPARTMENT EXCEPT AS AUTHORIZED BY COMPAL ELECTRONICS, INC. NEITHER THIS SHEET NOR THE INFORMATION IT CONTAINS MAY BE USED BY OR DISCLOSED TO ANY THIRD PARTY WITHOUT PRIOR WRITTEN CONSENT OF COMPAL ELECTRONICS, INC.

Compal Electronics, Inc.

Title: POWER & DECOUPLING

Size: Custom | Document Number: LA-A996P | Rev: 0.1

Date: Monday, February 17, 2014 | Sheet 8 of 46

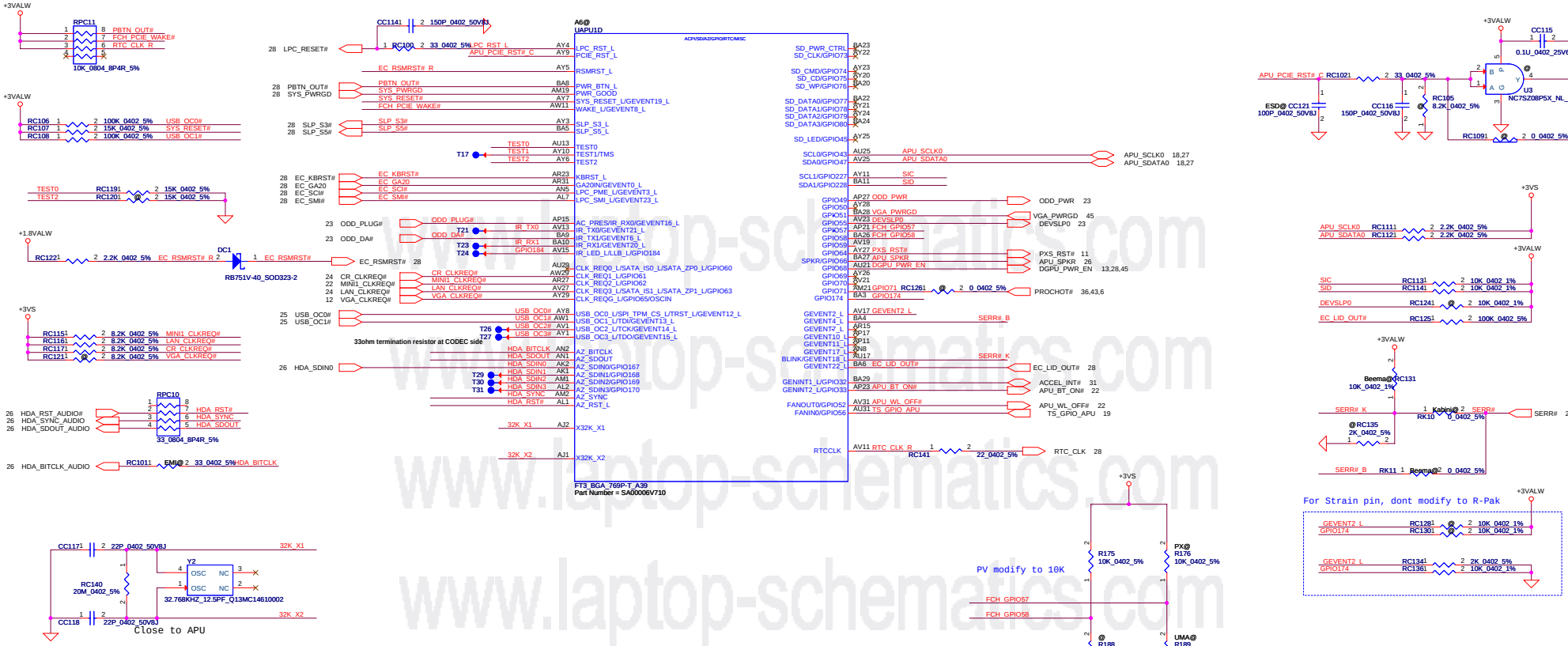

	GPIO58	GPIO57
ZSO41 14" UMA	L (R188)	L (R189)
ZSO41 14" DIS	L (R188)	H (Internal PH)
ZSO51 15" UMA	H (Internal PH)	L (R189)
ZSO51 15" DIS	H (Internal PH)	H (Internal PH)

Security Classification	Compal Secret Data		
Issued Date	2013/02/26	Deciphered Date	2015/07/08

THIS SHEET OF ENGINEERING DRAWING IS THE PROPRIETARY PROPERTY OF COMPAL ELECTRONICS, INC. AND CONTAINS CONFIDENTIAL AND TRADE SECRET INFORMATION. THIS SHEET MAY NOT BE TRANSFERRED FROM THE CUSTODY OF THE COMPETENT DIVISION OF R&D DEPARTMENT EXCEPT AS AUTHORIZED BY COMPAL ELECTRONICS, INC. NEITHER THIS SHEET NOR THE INFORMATION IT CONTAINS MAY BE USED BY OR DISCLOSED TO ANY THIRD PARTY WITHOUT PRIOR WRITTEN CONSENT OF COMPAL ELECTRONICS, INC.

Compal Electronics, Inc.

Title: GEVENT_GPIO_SD

Size: Custom | Document Number: LA-A996P | Rev: 0.1

Date: Monday, February 17, 2014 | Sheet 9 of 46

www.laptop-schematics.com

Panel ENBKL

Panel ENVDD

Panel PWM

www.laptop-schematics.com

Security Classification	Compal Secret Data		
Issued Date	2013/02/26	Deciphered Date	2015/07/08

THIS SHEET OF ENGINEERING DRAWING IS THE PROPRIETARY PROPERTY OF COMPAL ELECTRONICS, INC. AND CONTAINS CONFIDENTIAL AND TRADE SECRET INFORMATION. THIS SHEET MAY NOT BE TRANSFERED FROM THE CUSTODY OF THE COMPETENT DIVISION OF R&D DEPARTMENT EXCEPT AS AUTHORIZED BY COMPAL ELECTRONICS, INC. NEITHER THIS SHEET NOR THE INFORMATION IT CONTAINS MAY BE USED BY OR DISCLOSED TO ANY THIRD PARTY WITHOUT PRIOR WRITTEN CONSENT OF COMPAL ELECTRONICS, INC.

Title: Level Shifter

Size: Custom | Document Number: LA-A996P | Rev: 0.1

Date: Monday, February 17, 2014 | Sheet 10 of 46

AC Coupling Capacitor
PCIe Gen3: Recommended value is 220 nF
PCIe Gen1 and Gen2 only: Recommended value is 100 nF

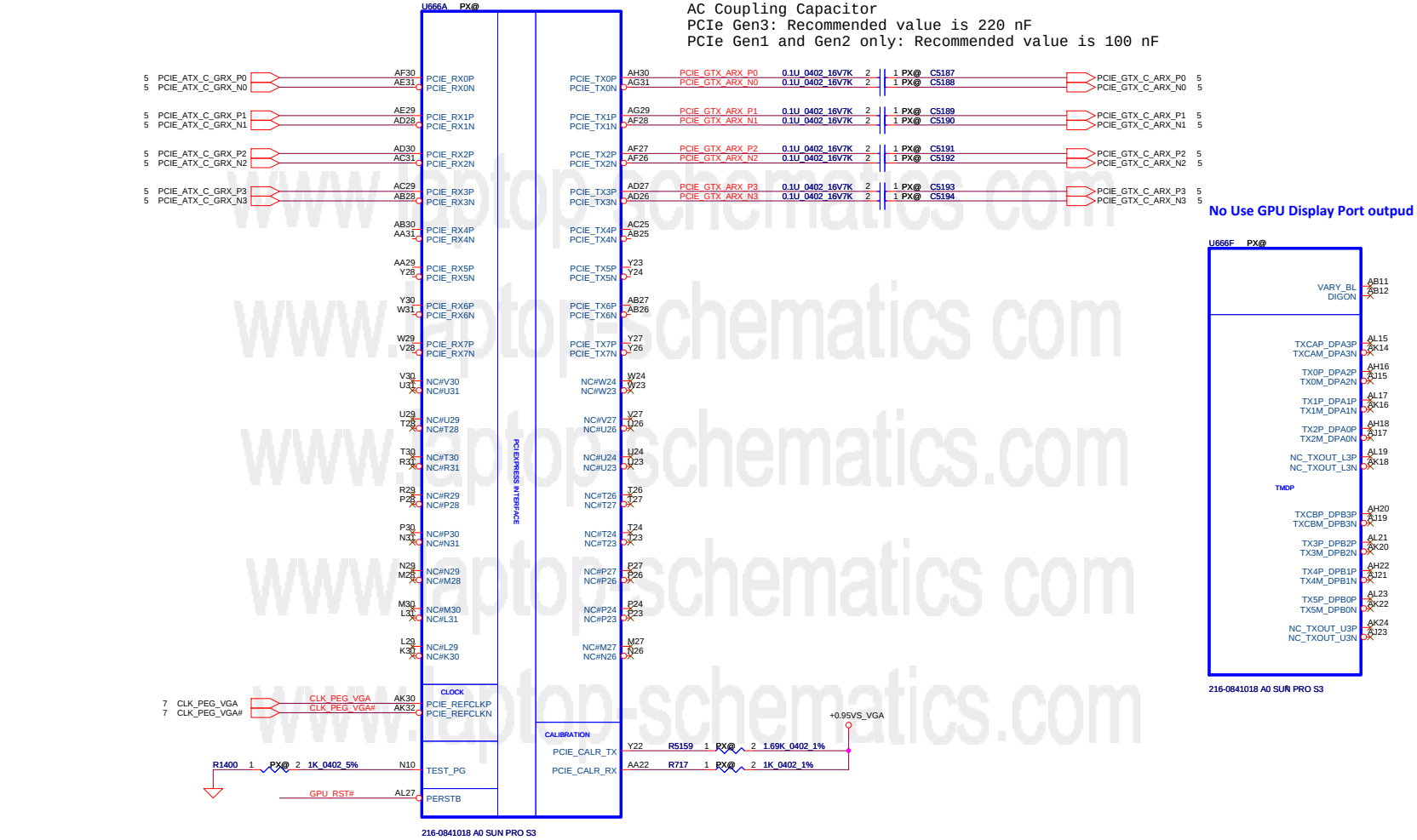

No Use GPU Display Port outpud

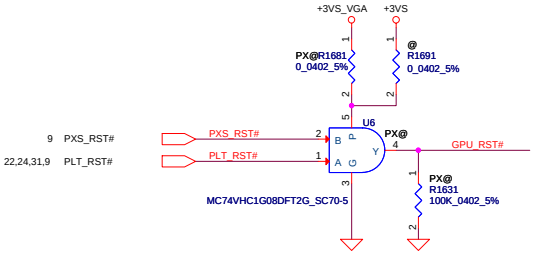

www.laptopschematics.com

Security Classification	Compal Secret Data		
Issued Date	2013/01/11	Deciphered Date	2013/12/31

THIS SHEET OF ENGINEERING DRAWING IS THE PROPRIETARY PROPERTY OF COMPAL ELECTRONICS, INC. AND CONTAINS CONFIDENTIAL AND TRADE SECRET INFORMATION. THIS SHEET MAY NOT BE TRANSFERED FROM THE CUSTODY OF THE COMPETENT DIVISION OF R&D DEPARTMENT EXCEPT AS AUTHORIZED BY COMPAL ELECTRONICS, INC. NEITHER THIS SHEET NOR THE INFORMATION IT CONTAINS MAY BE USED BY OR DISCLOSED TO ANY THIRD PARTY WITHOUT PRIOR WRITTEN CONSENT OF COMPAL ELECTRONICS, INC.

Compal Electronics, Inc.

Title: SUN_PCIE/DP

Size: Custom | Document Number: LA-A996P | Rev: 0.1

Date: Monday, February 17, 2014 | Sheet 11 of 46

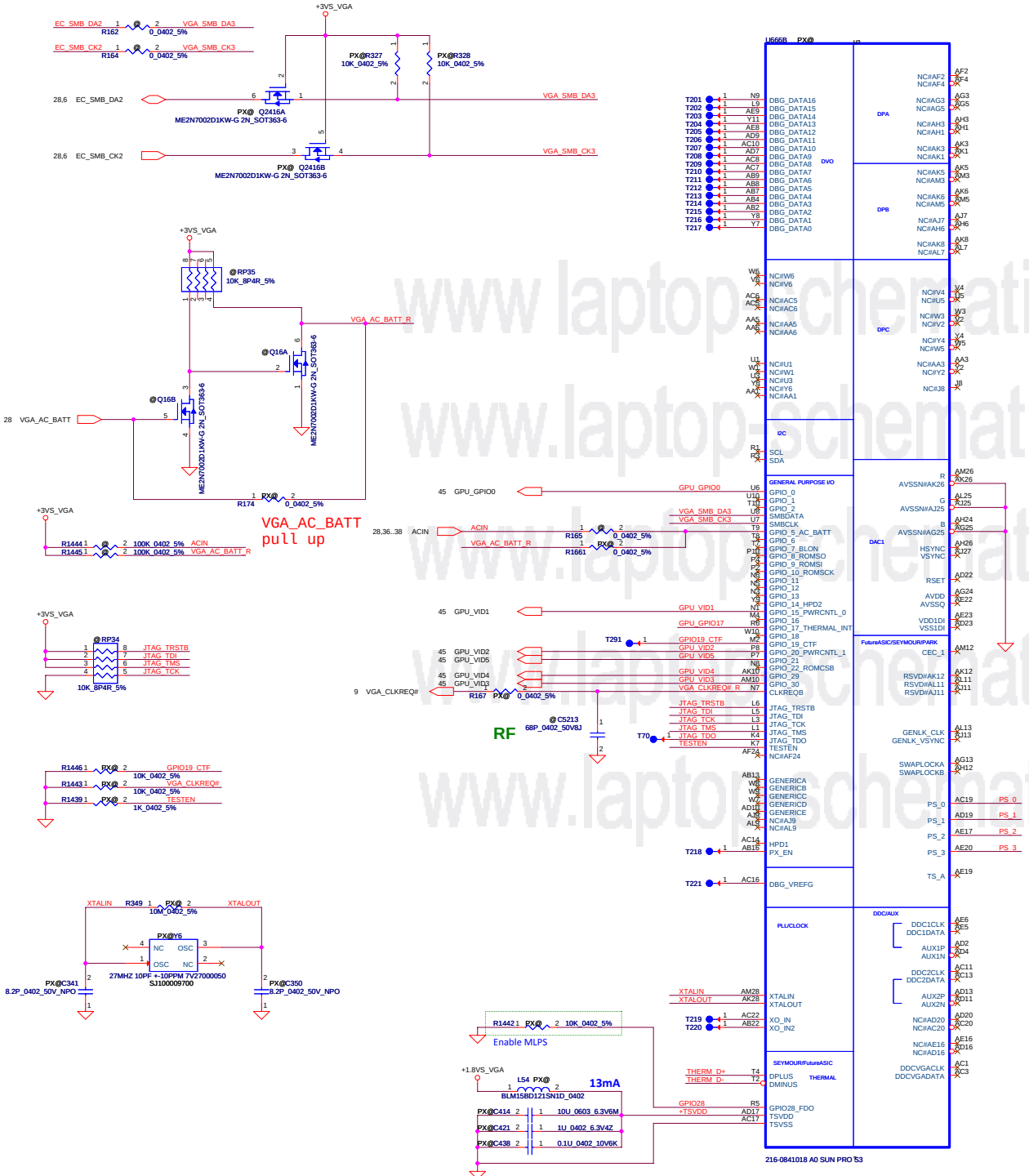

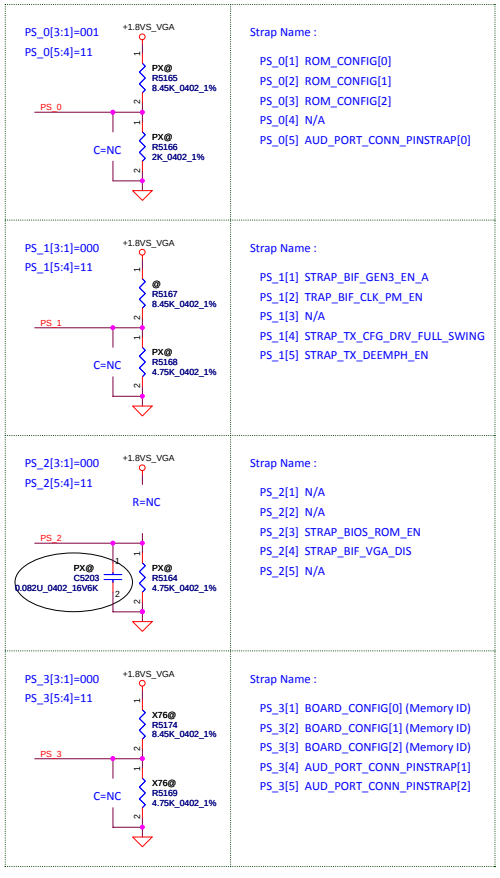

Resistor Divider Lookup Lable

R_pu (ohm)	R_pd (ohm)	Bitd [3:1]
NC	4.75k	000
8.45k	2k	001
4.53k	2k	010
6.98k	4.99k	011
4.53k	4.99k	100
3.24k	5.62k	101
3.4k	10k	110
4.75k	NC	111

0402 1% resistors are equired

Capacitor Divider Lookup Lable

Cap (nF)	Bitd [5:4]
680nF	00
82nF	01
10nF	10
NC	11

Memory ID	Memory Type	Configuration	Size	R5174	R5169	X76 P/N
000	SA000068U00	Samsung K4W2G1646E-BC1A	1GB	NC	4.75K	X7654132L01
001	SA000067500	Micron MT41J128M16JT-093G:K	1GB	8.45K	2K	X7654132L03
010	SA00006H400	Hynix H5TC2G63FFR-11C	1GB	4.53K	2K	X7654132L02
011	SA000076P00	Samsung K4W4G1646D-BC1A	2GB	6.98K	4.99K	X7654132L04
100	SA000077K00	Micron MT41J256M16HA-093G:E	2GB	4.53K	4.99K	X7654132L05
101	SA00006E800	Hynix H5TC4G63AFR-11C	2GB	3.24K	5.62K	X7654132L14
110	SA000068U40	Samsung K4W2G1646Q-BC1A	1GB	3.4K	10K	X7654132L13

(default)

ZZZ SAM@ 1G SAMSUNG X7654132L13
ZZZ3 MIC@ 1G MICRON X7654132L03
ZZZ4 HY@ 1G HYNIX X7654132L02
ZZZ5 SAM2@ 2G SAMSUNG X7654132L04
ZZZ6 MIC2@ 2G Micron X7654132L05
ZZZ7 HY2@ 2G Hynix X7654132L06

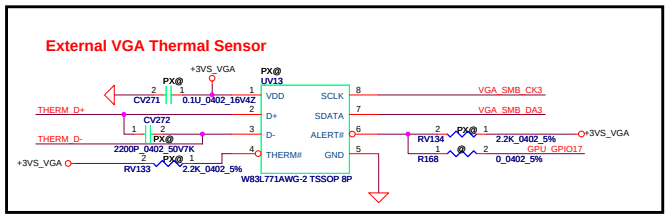

Security Classification	Compal Secret Data		
Issued Date	2013/01/11	Deciphered Date	2013/12/31

THIS SHEET OF ENGINEERING DRAWING IS THE PROPRIETARY PROPERTY OF COMPAL ELECTRONICS, INC. AND CONTAINS CONFIDENTIAL AND TRADE SECRET INFORMATION. THIS SHEET MAY NOT BE TRANSFERED FROM THE CUSTODY OF THE COMPETENT DIVISION OF R&D DEPARTMENT EXCEPT AS AUTHORIZED BY COMPAL ELECTRONICS, INC. NEITHER THIS SHEET NOR THE INFORMATION IT CONTAINS MAY BE USED BY OR DISCLOSED TO ANY THIRD PARTY WITHOUT PRIOR WRITTEN CONSENT OF COMPAL ELECTRONICS, INC.

Compal Electronics, Inc.

Title: SUN_MSIC

Size: Custom | Document Number: LA-A996P | Rev: 0.1

Date: Friday, February 21, 2014 | Sheet 12 of 46

+1.5VS to +1.5VS_VGA (2.096A)

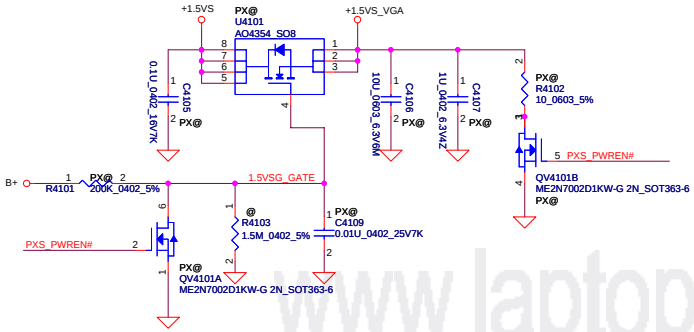

+3VS to +3VS_VGA (25mA)

+1.8VALW to +1.8VS_VGA (311mA)

+1.8VS_VGA 必須比 +VGA_CORE晚起來

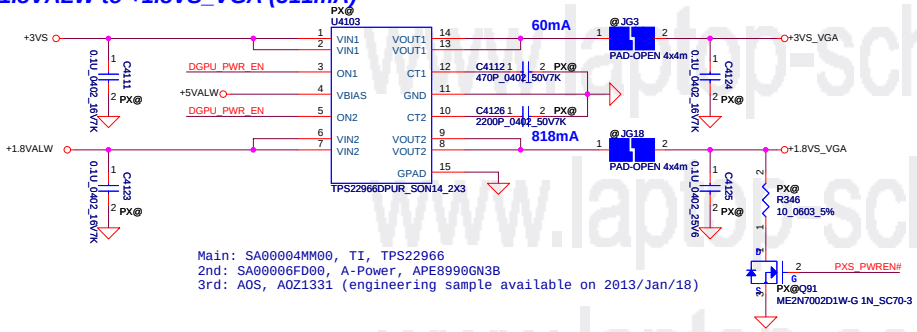

Main: SA00004MM00, TI, TPS22966
2nd: SA00006FD00, A-Power, APE8990GN3B
3rd: AOS, AOZ1331 (engineering sample available on 2013/Jan/18)

+0.95VALW to +0.95VSG (4.016A)

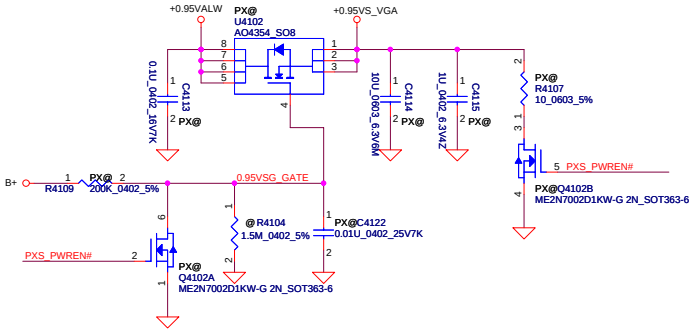

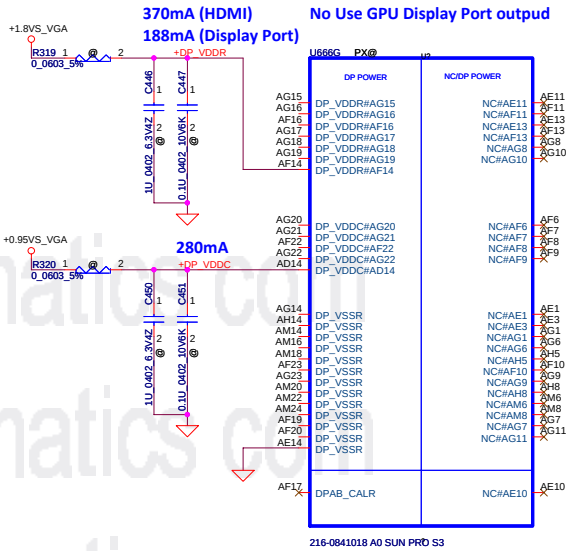

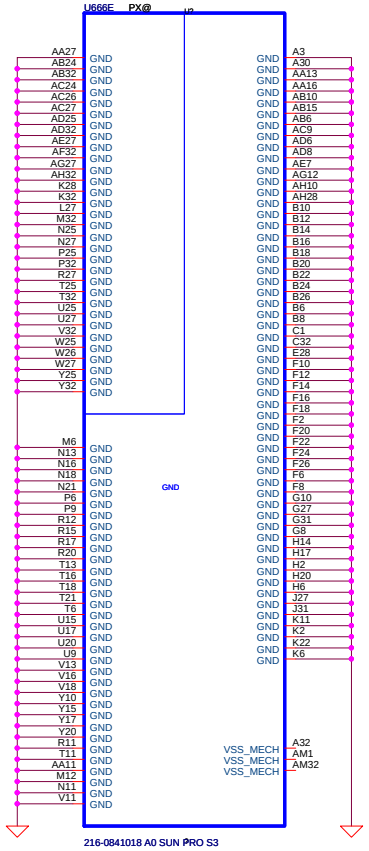

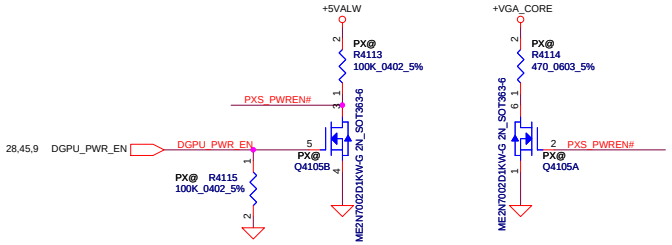

Security Classification	Compal Secret Data		
Issued Date	2013/01/11	Deciphered Date	2013/12/31

THIS SHEET OF ENGINEERING DRAWING IS THE PROPRIETARY PROPERTY OF COMPAL ELECTRONICS, INC. AND CONTAINS CONFIDENTIAL AND TRADE SECRET INFORMATION. THIS SHEET MAY NOT BE TRANSFERED FROM THE CUSTODY OF THE COMPETENT DIVISION OF R&D DEPARTMENT EXCEPT AS AUTHORIZED BY COMPAL ELECTRONICS, INC. NEITHER THIS SHEET NOR THE INFORMATION IT CONTAINS MAY BE USED BY OR DISCLOSED TO ANY THIRD PARTY WITHOUT PRIOR WRITTEN CONSENT OF COMPAL ELECTRONICS, INC.

Compal Electronics, Inc.

Title: SUN_Power/GND

Size: Custom | Document Number: LA-A996P | Rev: 0.1

Date: Monday, February 17, 2014 | Sheet 13 of 46

www.laptop-schematics.com

+VGA_CORE		10uF	1uF	0.1uF
VDDC	TBD	5 (1@)	10 (2@)	0
VDDCI	3.5A	1	3	0

+0.95VS_VGA		10uF	1uF	0.1uF
PCIE_VDDC	2.5A	2 (1@)	5 (1@)	0
BIF_VDDC	1.4A	0	0	0
SPLL_VDDC	100mA	1	1	1

+1.5VS_VGA		10uF	1uF	0.1uF
VDDR1	1.5A	3	5	5

+1.8VS_VGA		10uF	1uF	0.1uF
PCIE_PVDD	100mA	1	1	1
MPLL_PVDD	130mA	1	1	1
SPLL_PVDD	75mA	1	1	1
VDDR4	(300mA)	0	0	0
VDD_CT	13mA	1	1	1
+TSVDD	13mA	1	1	1
+DP_VDDR		0	0	0
+DP_VDDC		0	0	0

+3VS_VGA		10uF	1uF	0.1uF
VDDR3	25mA	0	2 (1@)	1

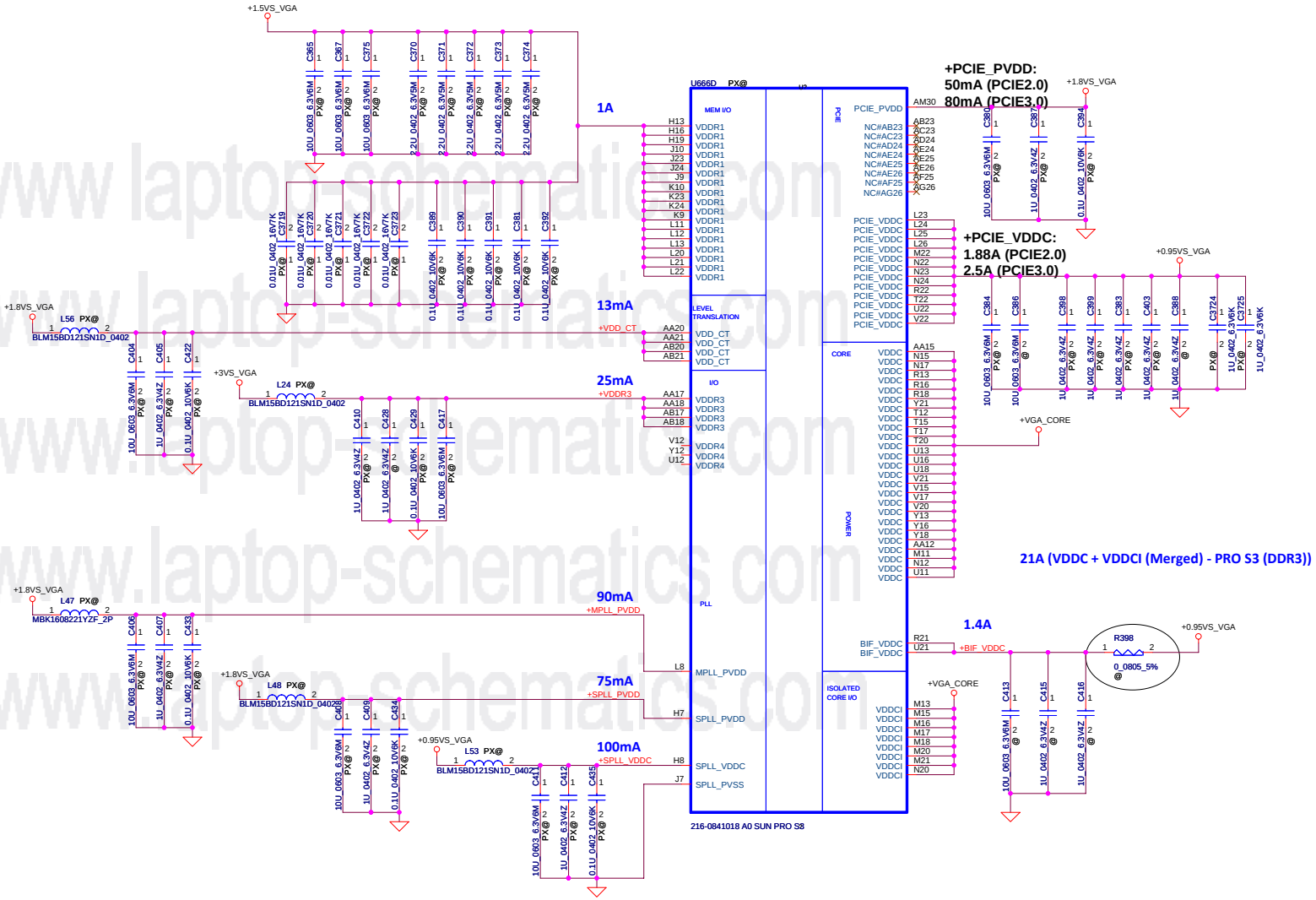

www.laptop-schematics.com

Security Classification	Compal Secret Data		
Issued Date	2013/01/11	Deciphered Date	2013/12/31

THIS SHEET OF ENGINEERING DRAWING IS THE PROPRIETARY PROPERTY OF COMPAL ELECTRONICS, INC. AND CONTAINS CONFIDENTIAL AND TRADE SECRET INFORMATION. THIS SHEET MAY NOT BE TRANSFERED FROM THE CUSTODY OF THE COMPETENT DIVISION OF R&D DEPARTMENT EXCEPT AS AUTHORIZED BY COMPAL ELECTRONICS, INC. NEITHER THIS SHEET NOR THE INFORMATION IT CONTAINS MAY BE USED BY OR DISCLOSED TO ANY THIRD PARTY WITHOUT PRIOR WRITTEN CONSENT OF COMPAL ELECTRONICS, INC.

Compal Electronics, Inc.

Title: SUN_Power

Size: Custom | Document Number: LA-A996P | Rev: 0.1

Date: Monday, February 17, 2014 | Sheet 14 of 46

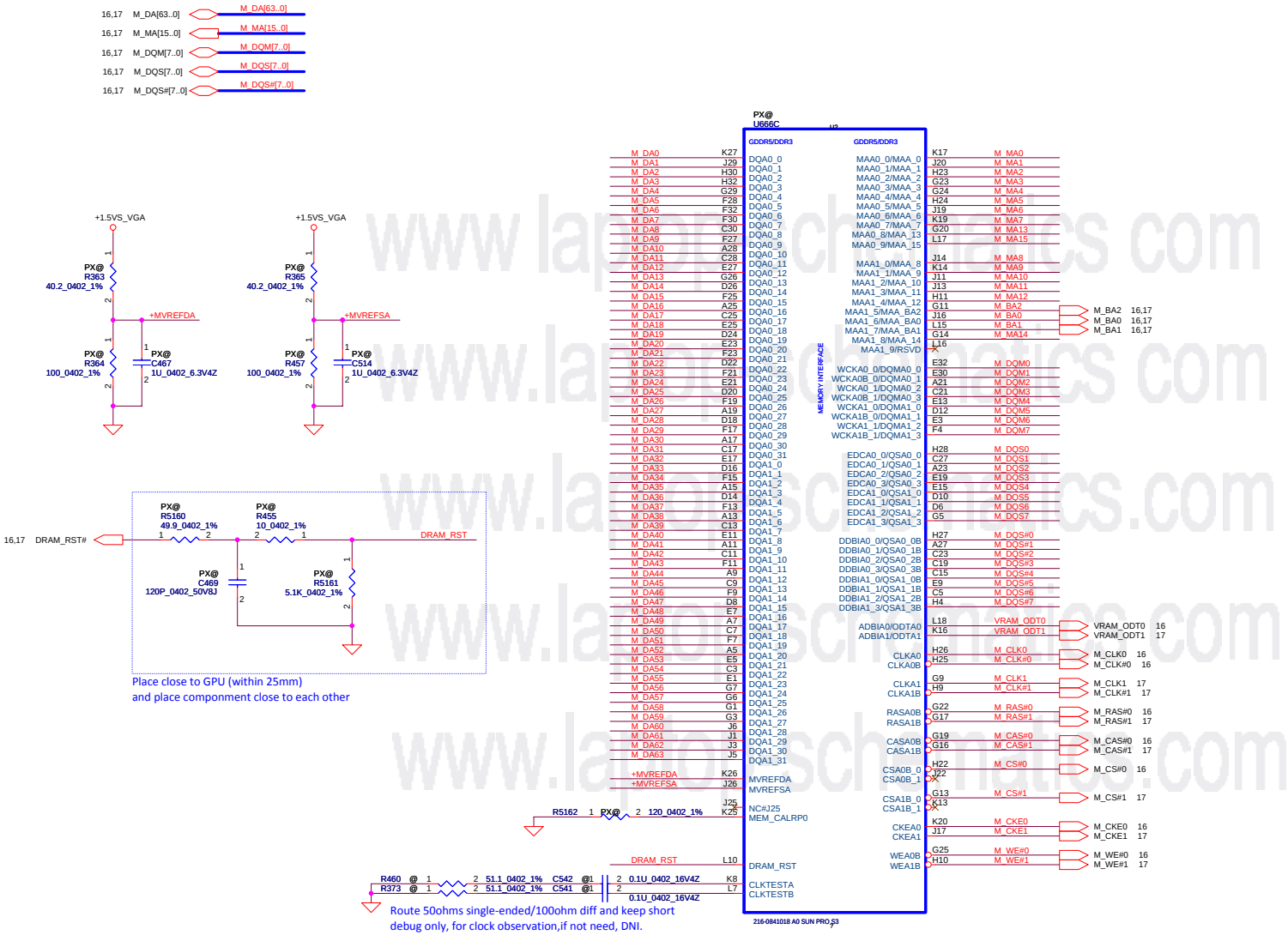

www.laptopschematics.com

Security Classification	Compal Secret Data		
Issued Date	2013/01/11	Deciphered Date	2013/12/31

THIS SHEET OF ENGINEERING DRAWING IS THE PROPRIETARY PROPERTY OF COMPAL ELECTRONICS, INC. AND CONTAINS CONFIDENTIAL AND TRADE SECRET INFORMATION. THIS SHEET MAY NOT BE TRANSFERED FROM THE CUSTODY OF THE COMPETENT DIVISION OF R&D DEPARTMENT EXCEPT AS AUTHORIZED BY COMPAL ELECTRONICS, INC. NEITHER THIS SHEET NOR THE INFORMATION IT CONTAINS MAY BE USED BY OR DISCLOSED TO ANY THIRD PARTY WITHOUT PRIOR WRITTEN CONSENT OF COMPAL ELECTRONICS, INC.

Compal Electronics, Inc.

Title: SUN_MEM

Size: Custom | Document Number: LA-A996P | Rev: 0.1

Date: Monday, February 17, 2014 | Sheet 15 of 46

Memory Partition A - Lower 32 bits

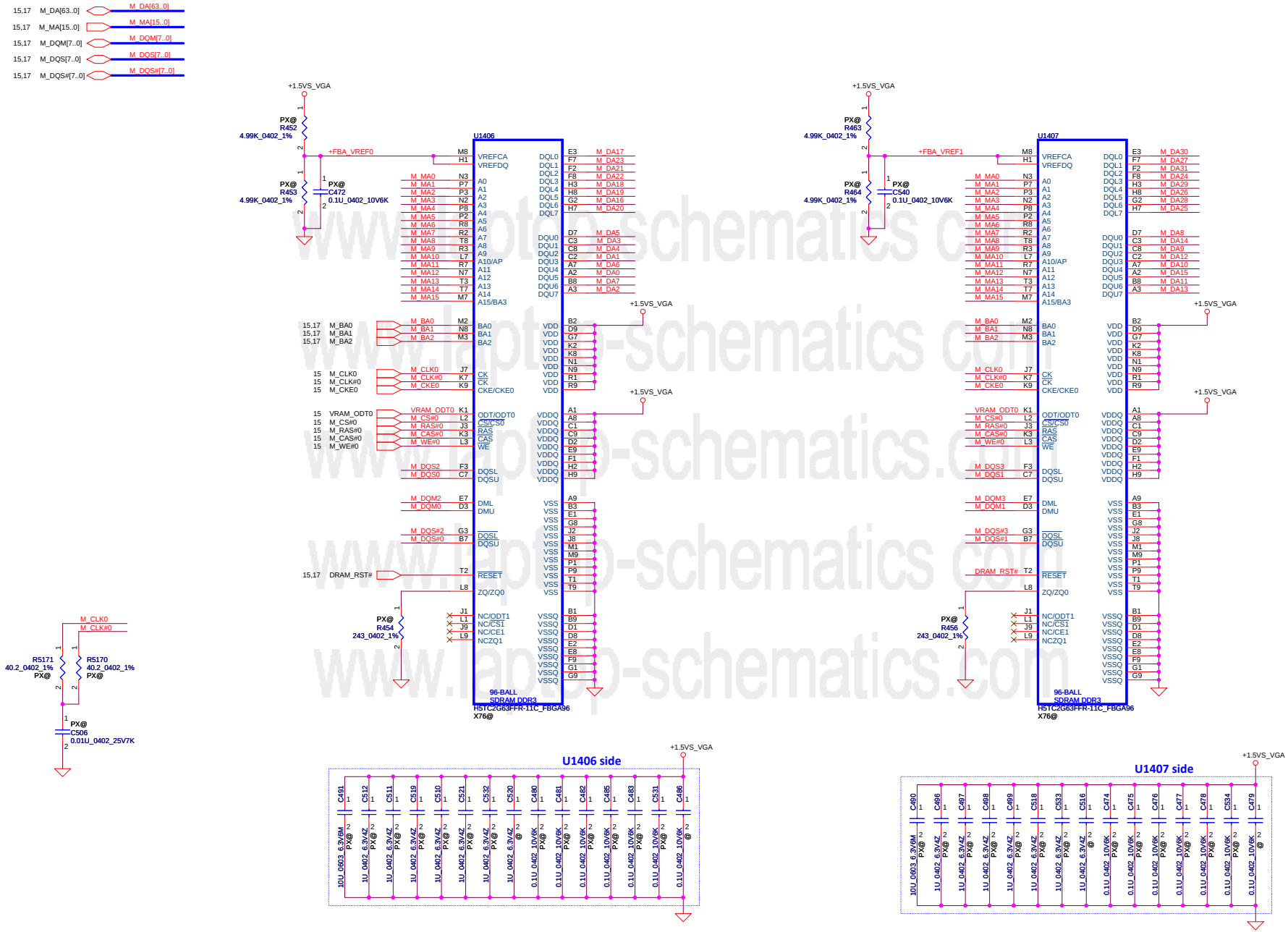

Security Classification	Compal Secret Data		
Issued Date	2013/01/11	Deciphered Date	2013/12/31

THIS SHEET OF ENGINEERING DRAWING IS THE PROPRIETARY PROPERTY OF COMPAL ELECTRONICS, INC. AND CONTAINS CONFIDENTIAL AND TRADE SECRET INFORMATION. THIS SHEET MAY NOT BE TRANSFERED FROM THE CUSTODY OF THE COMPETENT DIVISION OF R&D DEPARTMENT EXCEPT AS AUTHORIZED BY COMPAL ELECTRONICS, INC. NEITHER THIS SHEET NOR THE INFORMATION IT CONTAINS MAY BE USED BY OR DISCLOSED TO ANY THIRD PARTY WITHOUT PRIOR WRITTEN CONSENT OF COMPAL ELECTRONICS, INC.

Compal Electronics, Inc.

Title: **SUN_VRAM A Lower**

Size: Custom | Document Number: **LA-A996P** | Rev: 0.1

Date: Monday, February 17, 2014 | Sheet 16 of 46

www.laptop-schematics.com

Memory Partition A - Upper 32 bits

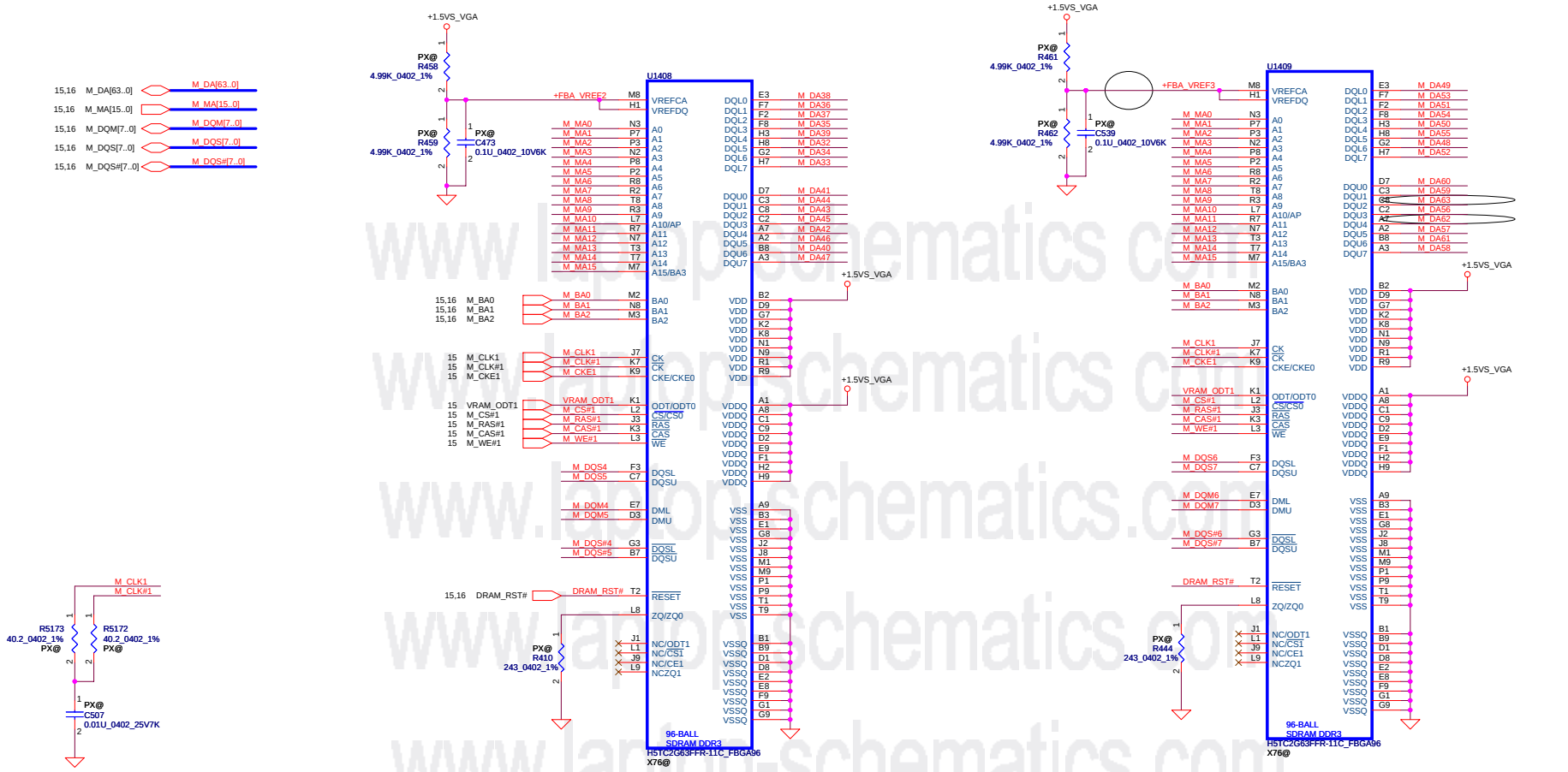

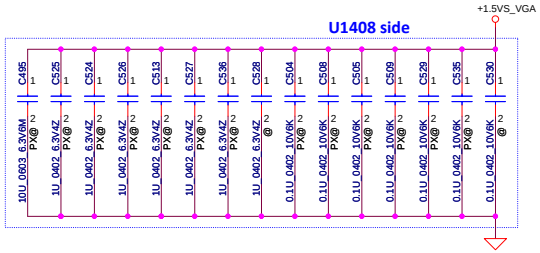

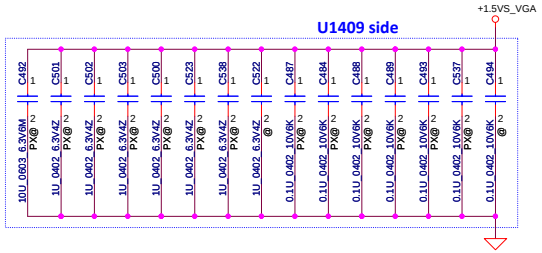

www.laptop-schematics.com

Security Classification	Compal Secret Data		
Issued Date	2013/01/11	Deciphered Date	2013/12/31

THIS SHEET OF ENGINEERING DRAWING IS THE PROPRIETARY PROPERTY OF COMPAL ELECTRONICS, INC. AND CONTAINS CONFIDENTIAL AND TRADE SECRET INFORMATION. THIS SHEET MAY NOT BE TRANSFERED FROM THE CUSTODY OF THE COMPETENT DIVISION OF R&D DEPARTMENT EXCEPT AS AUTHORIZED BY COMPAL ELECTRONICS, INC. NEITHER THIS SHEET NOR THE INFORMATION IT CONTAINS MAY BE USED BY OR DISCLOSED TO ANY THIRD PARTY WITHOUT PRIOR WRITTEN CONSENT OF COMPAL ELECTRONICS, INC.

Compal Electronics, Inc.

Title: **SUN_VRAM A Upper**

Size: Custom | Document Number: **LA-A996P** | Rev: 0.1

Date: Monday, February 17, 2014 | Sheet 17 of 46

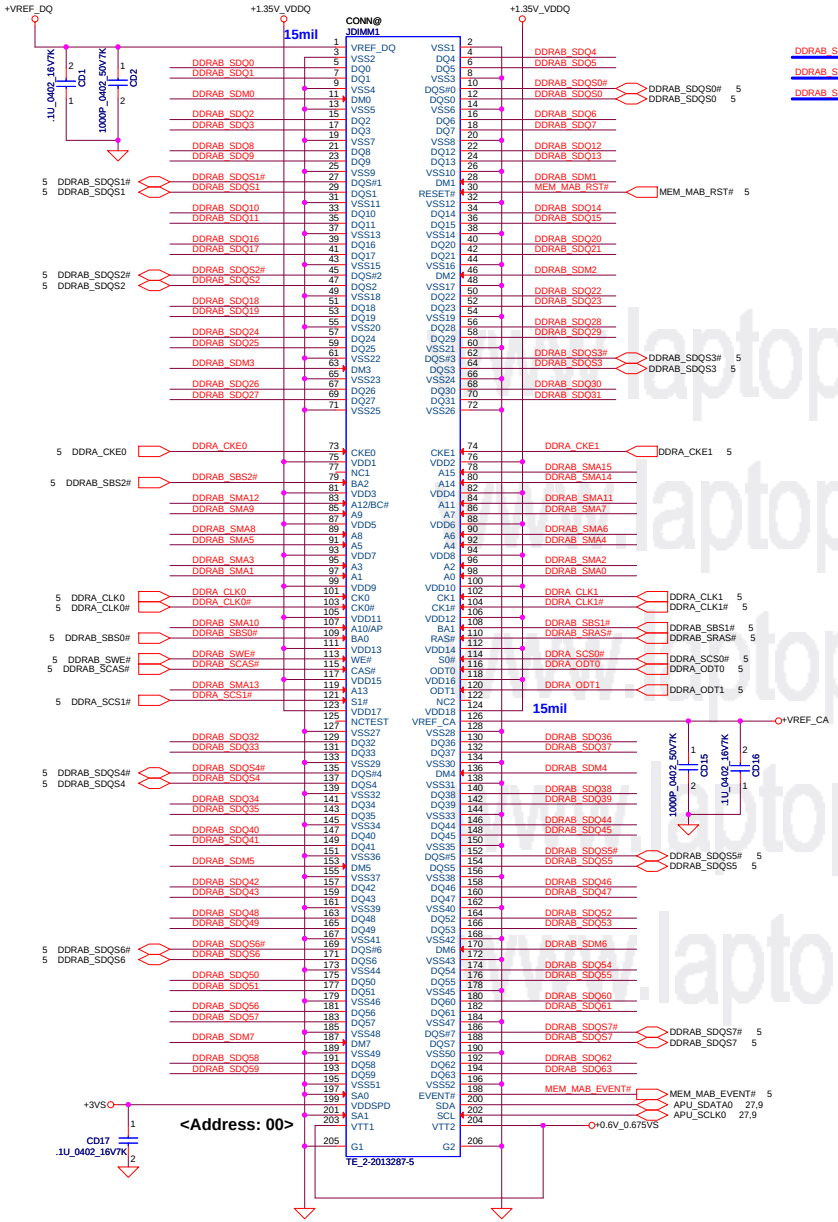

DIMM_1 H:4mm Reverse

+1.35V_VDDQ/+0.675VS OF DIMM1

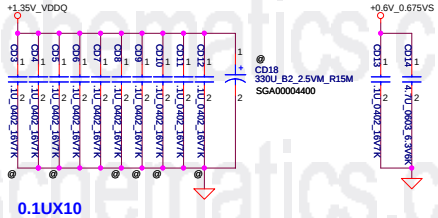

0.1UX10

VREF for DIMM1

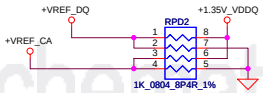

www.laptop-schematics.com

Security Classification	Compal Secret Data			Compal Electronics, Inc.
Issued Date	2013/02/26	Deciphered Date	2015/07/08	Title: DDR3 SODIMM Socket

THIS SHEET OF ENGINEERING DRAWING IS THE PROPRIETARY PROPERTY OF COMPAL ELECTRONICS, INC. AND CONTAINS CONFIDENTIAL AND TRADE SECRET INFORMATION. THIS SHEET MAY NOT BE TRANSFERED FROM THE CUSTODY OF THE COMPETENT DIVISION OF R&D DEPARTMENT EXCEPT AS AUTHORIZED BY COMPAL ELECTRONICS, INC. NEITHER THIS SHEET NOR THE INFORMATION IT CONTAINS MAY BE USED BY OR DISCLOSED TO ANY THIRD PARTY WITHOUT PRIOR WRITTEN CONSENT OF COMPAL ELECTRONICS, INC.

Size	Document Number	Rev
C	LA-A996P	0.1

Date: Monday, February 17, 2014 Sheet 18 of 46

LVDS Power

+3VS
Display@ UG1
IN OUT GND SS EN
APL3512_SOT23-5
UG1 2132S@ APL3512_SOT23-5 SA00003AR00
RG1 @ 0_0201_5%
CG1 1500P_0402_50V7K
+LCDVDD
CG2 4.7U_0603_6.3V6K
CG3 0.1U_0402_16V7K
6 DP_ENVDD — Display@ RG3 0_0402_5%
27 +DP_ENVDD — BLVDS@ RG4 0_0402_5%

Camera

7 USB20_N4 — R170 @ 0_0402_5% — EMI@ SM070003Y00 — USB20_N4_R
7 USB20_P4 — R171 @ 0_0402_5% — WCM-2012-900T_4P — USB20_P4_R
L12
USB20_P4_R, USB20_N4_R — D5 PESD5V0U2BT_SOT23-3 @ESD@ SCA00000U10

W=60mils

INVPWR_B+
L1 EMI@ SM010014520 0_0805_5%
L2 EMI@ SM010014520 0_0805_5%
@EMI@ C117 680P_0402_50V7K
C118 68P_0402_50V8J

W=60mils

B+

SM010014520 3000ma
220ohm@100mhz
DCR 0.04

Touch Screen

7 USB20_P5 — R172 @ 0_0402_5% — EMI@ SM070003Y00 — USB20_P5_R
7 USB20_N5 — R173 @ 0_0402_5% — WCM-2012-900T_4P — USB20_N5_R
L3
USB20_P5_R, USB20_N5_R — D4 PESD5V0U2BT_SOT23-3 @ESD@ SCA00000U10

Touch Screen Power

+5VALW +3VALW
@RTS2 100K_0402_5%
EDP@ RTS3 100K_0402_5%
EDP@ RTS1 1K_0402_5%
EDP@ QTS1 2N7002_SOT23
TOUCH_ON# 28
CTS2 EDP@ 0.047U_0402_16V7K
+VCC_TOUCH
EDP@ CTS1 0.1U_0402_16V4Z
QTS2 EDP@ LP2301ALT1G 1P SOT-23-3
RTS5 @ 0_0402_5% +5VS
RTS6 EDP@ 0_0402_5% +3VS

+3VS
R160 2.2K_0402_5% LCD_CLK
R161 2.2K_0402_5% LCD_DATA
@C119 10P_0402_50V8J
@C120 10P_0402_50V8J

USB20_N4
@R202 300_0402_5%
10P_0402_50V8J @C290

C121 220P_0402_50V7K INVTPWM
C122 220P_0402_50V7K DISPOFF#

LCD/LED PANEL Conn.

+LCDVDD
CONN@ JLVDS1 STARC_107K40-000001-G2

28 EC_INVT_PWM — R259 @ 0_0402_5% — INVTPWM
27,6 DP_INT_PWM — R258 Display@ 0_0402_5%
27 eDP_DP_INT_PWM — R262 BLVDS@ 0_0402_5%
BLVDS@ R163 10K_0402_5%

9 TS_GPIO_APU — TS_GPIO_APU — R260 @ 0_0402_5%
28 TS_GPIO_EC — TS_GPIO_EC — R261 @ 0_0402_5%
TS_GPIO

27 LCD_CLK — LCD_CLK
27 LCD_DATA — LCD_DATA
27 LVDS_TXP0_F — LVDS_TXP0_F
27 LVDS_TXN0_F — LVDS_TXN0_F
27 LVDS_TXP1_F — LVDS_TXP1_F
27 LVDS_TXN1_F — LVDS_TXN1_F
27 LVDS_TXP2_F — LVDS_TXP2_F
27 LVDS_TXN2_F — LVDS_TXN2_F
27 LVDS_CLKP_F — LVDS_CLKP_F
27 LVDS_CLKN_F — LVDS_CLKN_F
USB20_N4_R USB20_P4_R USB20_P5_R USB20_N5_R
DISPOFF#_R INVTPWM TS_GPIO
INVPWR_B+ +VCC_TOUCH +3VS
26 D_MIC_L_CLK — D_MIC_L_CLK
26 D_MIC_L_DATA — D_MIC_L_DATA
27,6 EDP_HPD — RT19 EDP@ 0_0402_5%

27 DISPOFF# — R166 33_0402_5% — R1671 10K_0402_5%

D3 PESD5V0U2BT_SOT23-3 @ESD@ SCA00000U10
D_MIC_L_CLK D_MIC_L_DATA

www.laptop-schematics.com

Security Classification	Compal Secret Data		
Issued Date	2013/02/26	Deciphered Date	2015/07/08

THIS SHEET OF ENGINEERING DRAWING IS THE PROPRIETARY PROPERTY OF COMPAL ELECTRONICS, INC. AND CONTAINS CONFIDENTIAL AND TRADE SECRET INFORMATION. THIS SHEET MAY NOT BE TRANSFERED FROM THE CUSTODY OF THE COMPETENT DIVISION OF R&D DEPARTMENT EXCEPT AS AUTHORIZED BY COMPAL ELECTRONICS, INC. NEITHER THIS SHEET NOR THE INFORMATION IT CONTAINS MAY BE USED BY OR DISCLOSED TO ANY THIRD PARTY WITHOUT PRIOR WRITTEN CONSENT OF COMPAL ELECTRONICS, INC.

Compal Electronics, Inc.

Title: **LVDS Connector**

Size | Document Number: LA-A996P | Rev: 0.1

Date: Wednesday, March 26, 2014 | Sheet 19 of 46

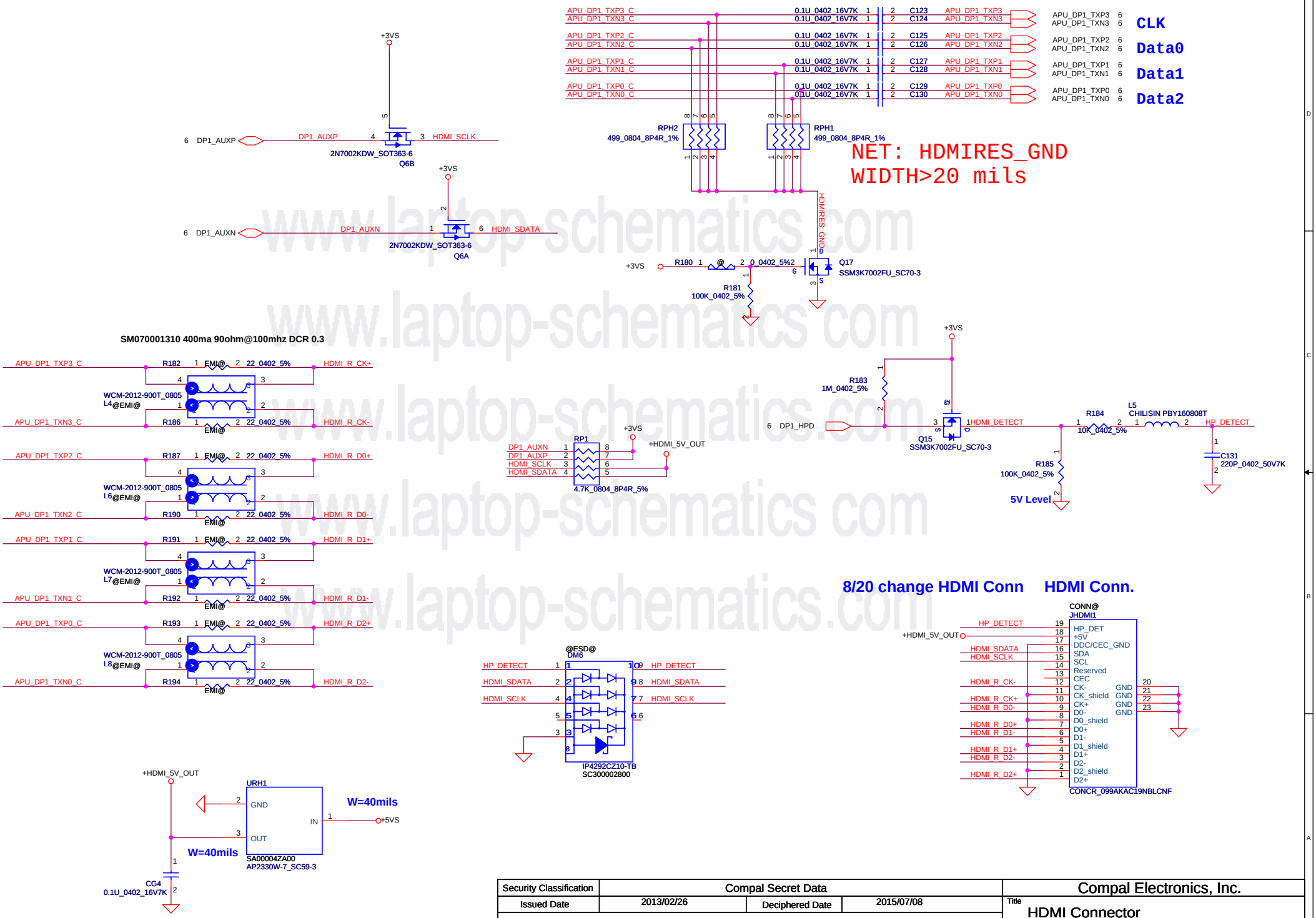

Security Classification	Compal Secret Data		
Issued Date	2013/02/26	Deciphered Date	2015/07/08

THIS SHEET OF ENGINEERING DRAWING IS THE PROPRIETARY PROPERTY OF COMPAL ELECTRONICS, INC. AND CONTAINS CONFIDENTIAL AND TRADE SECRET INFORMATION. THIS SHEET MAY NOT BE TRANSFERED FROM THE CUSTODY OF THE COMPETENT DIVISION OF R&D DEPARTMENT EXCEPT AS AUTHORIZED BY COMPAL ELECTRONICS, INC. NEITHER THIS SHEET NOR THE INFORMATION IT CONTAINS MAY BE USED BY OR DISCLOSED TO ANY THIRD PARTY WITHOUT PRIOR WRITTEN CONSENT OF COMPAL ELECTRONICS, INC.

Compal Electronics, Inc.

Title: HDMI Connector

Size: Custom | Document Number: LA-A996P | Rev: 0.1

Date: Monday, February 17, 2014 | Sheet 20 of 46

www.laptop-schematics.com

CRT share HDMI Power

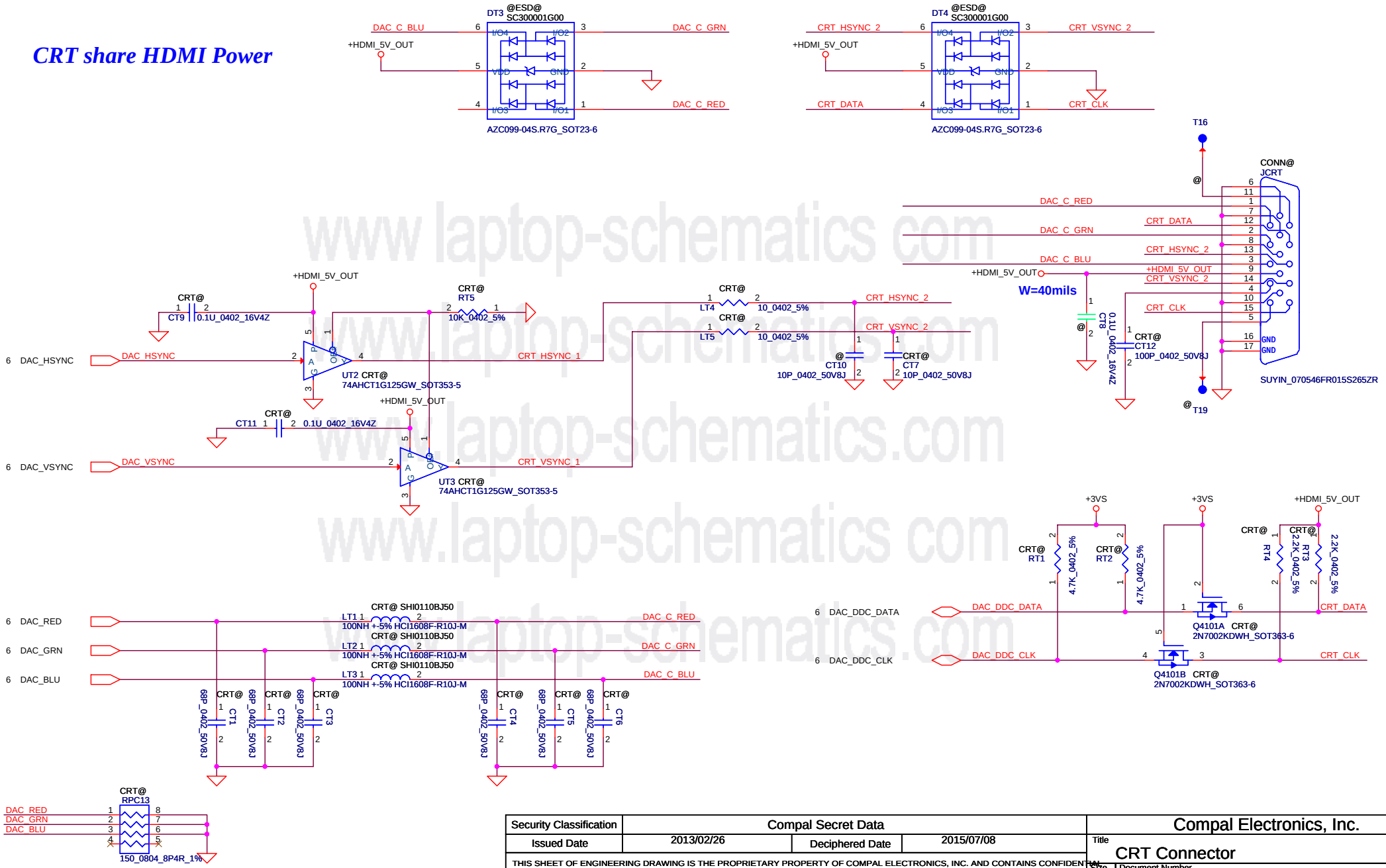

www.laptop-schematics.com

Security Classification	Compal Secret Data		
Issued Date	2013/02/26	Deciphered Date	2015/07/08

THIS SHEET OF ENGINEERING DRAWING IS THE PROPRIETARY PROPERTY OF COMPAL ELECTRONICS, INC. AND CONTAINS CONFIDENTIAL AND TRADE SECRET INFORMATION. THIS SHEET MAY NOT BE TRANSFERED FROM THE CUSTODY OF THE COMPETENT DIVISION OF R&D DEPARTMENT EXCEPT AS AUTHORIZED BY COMPAL ELECTRONICS, INC. NEITHER THIS SHEET NOR THE INFORMATION IT CONTAINS MAY BE USED BY OR DISCLOSED TO ANY THIRD PARTY WITHOUT PRIOR WRITTEN CONSENT OF COMPAL ELECTRONICS, INC.

Compal Electronics, Inc.

Title: CRT Connector

Size: B | Document Number: LA-A996P | Rev: 0.1

Date: Friday, February 21, 2014 | Sheet 21 of 46

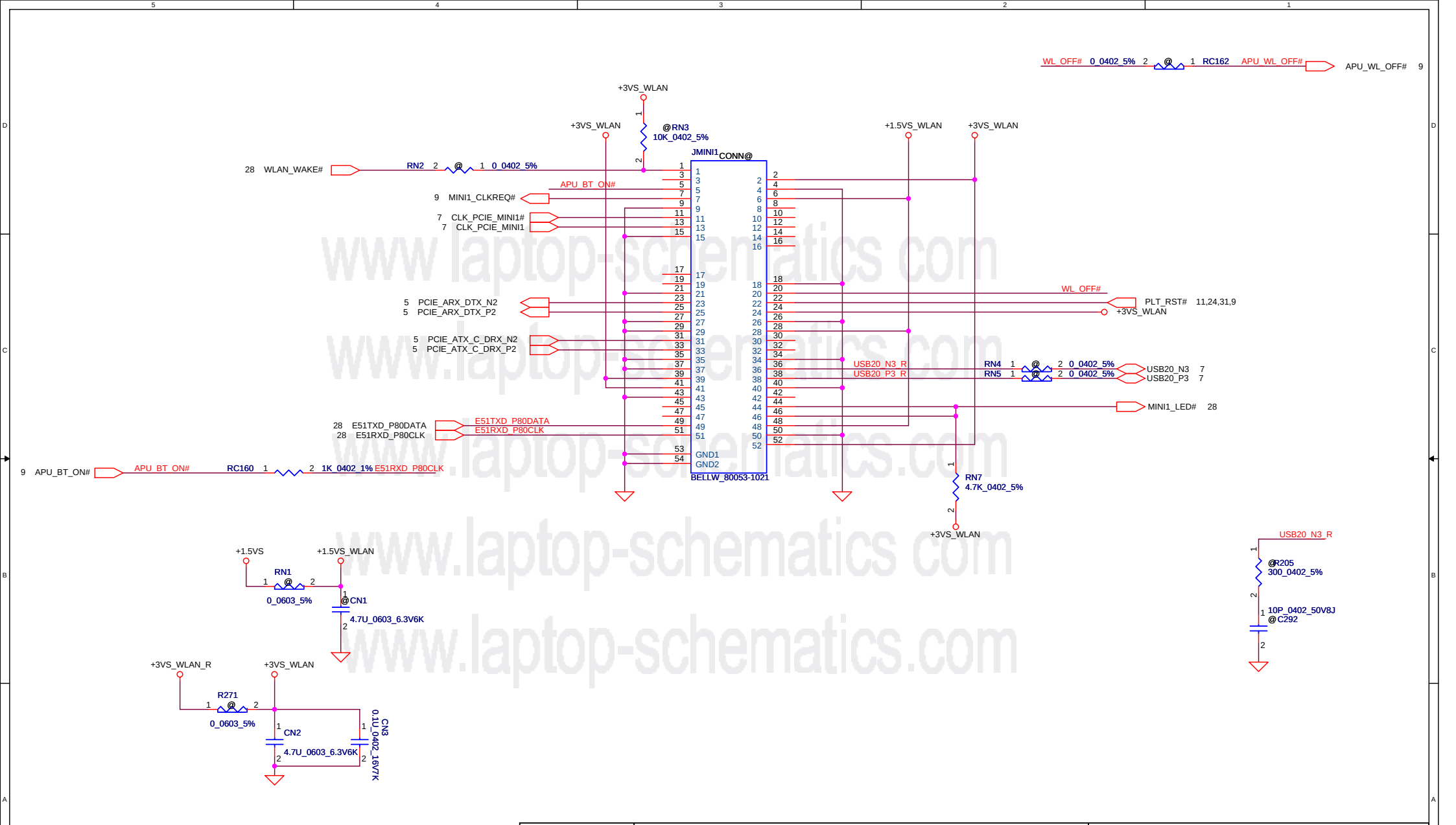

www.laptop-schematics.com

Security Classification	Compal Secret Data			Compal Electronics, Inc.
Issued Date	2013/02/26	Deciphered Date	2015/07/08	Title: WLAN
THIS SHEET OF ENGINEERING DRAWING IS THE PROPRIETARY PROPERTY OF COMPAL ELECTRONICS, INC. AND CONTAINS CONFIDENTIAL AND TRADE SECRET INFORMATION. THIS SHEET MAY NOT BE TRANSFERED FROM THE CUSTODY OF THE COMPETENT DIVISION OF R&D DEPARTMENT EXCEPT AS AUTHORIZED BY COMPAL ELECTRONICS, INC. NEITHER THIS SHEET NOR THE INFORMATION IT CONTAINS MAY BE USED BY OR DISCLOSED TO ANY THIRD PARTY WITHOUT PRIOR WRITTEN CONSENT OF COMPAL ELECTRONICS, INC.				Size: Document Number: LA-A996P — Rev: 0.1
				Date: Monday, February 17, 2014 — Sheet 22 of 46

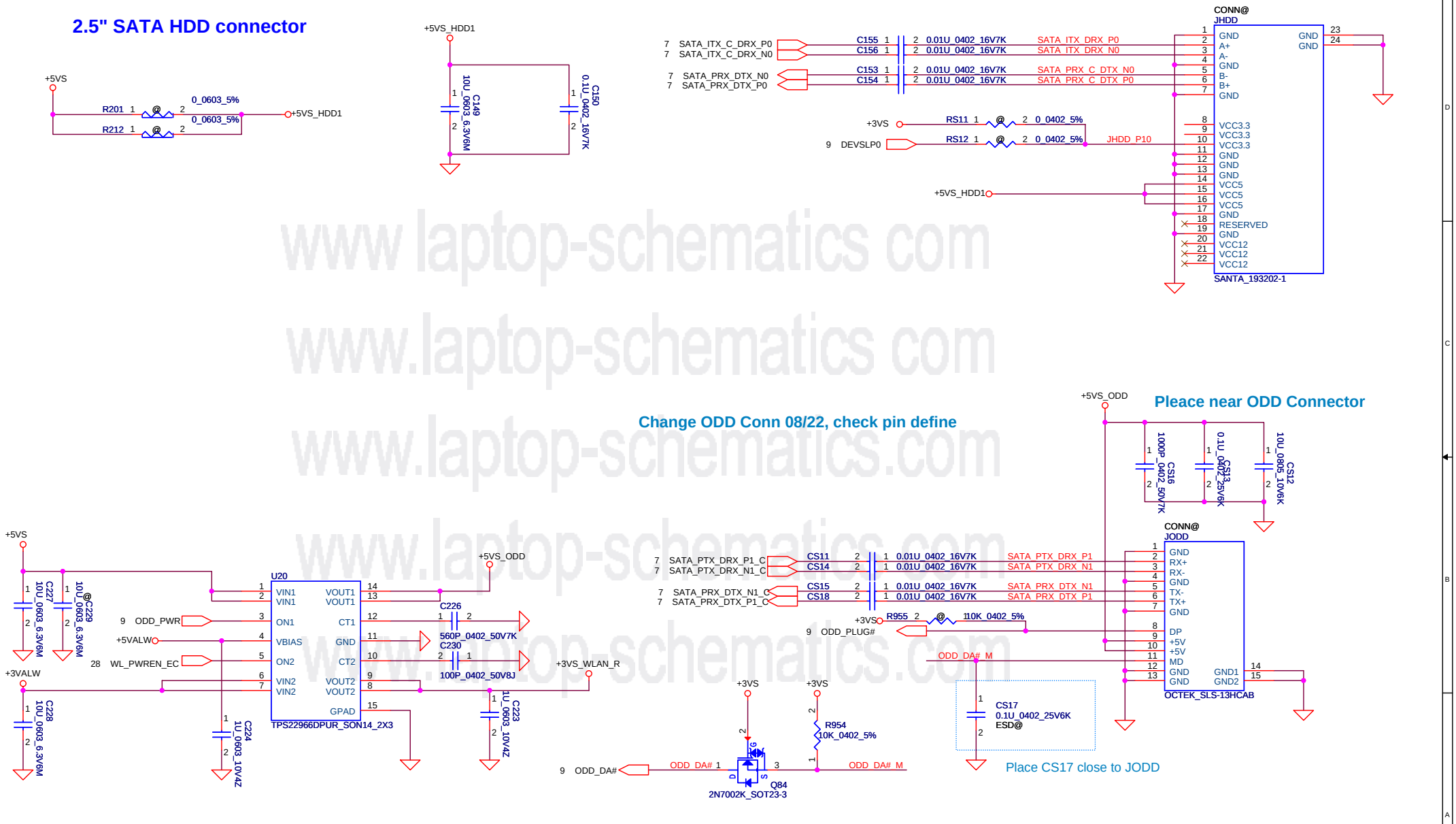

www.laptop-schematics.com

Security Classification	Compal Secret Data		
Issued Date	2013/02/26	Deciphered Date	2015/07/08

THIS SHEET OF ENGINEERING DRAWING IS THE PROPRIETARY PROPERTY OF COMPAL ELECTRONICS, INC. AND CONTAINS CONFIDENTIAL AND TRADE SECRET INFORMATION. THIS SHEET MAY NOT BE TRANSFERED FROM THE CUSTODY OF THE COMPETENT DIVISION OF R&D DEPARTMENT EXCEPT AS AUTHORIZED BY COMPAL ELECTRONICS, INC. NEITHER THIS SHEET NOR THE INFORMATION IT CONTAINS MAY BE USED BY OR DISCLOSED TO ANY THIRD PARTY WITHOUT PRIOR WRITTEN CONSENT OF COMPAL ELECTRONICS, INC.

Compal Electronics, Inc.

Title: ODD/SATA Conn

Size: B | Document Number: LA-A996P | Rev: 0.1

Date: Monday, February 17, 2014 | Sheet 23 of 46

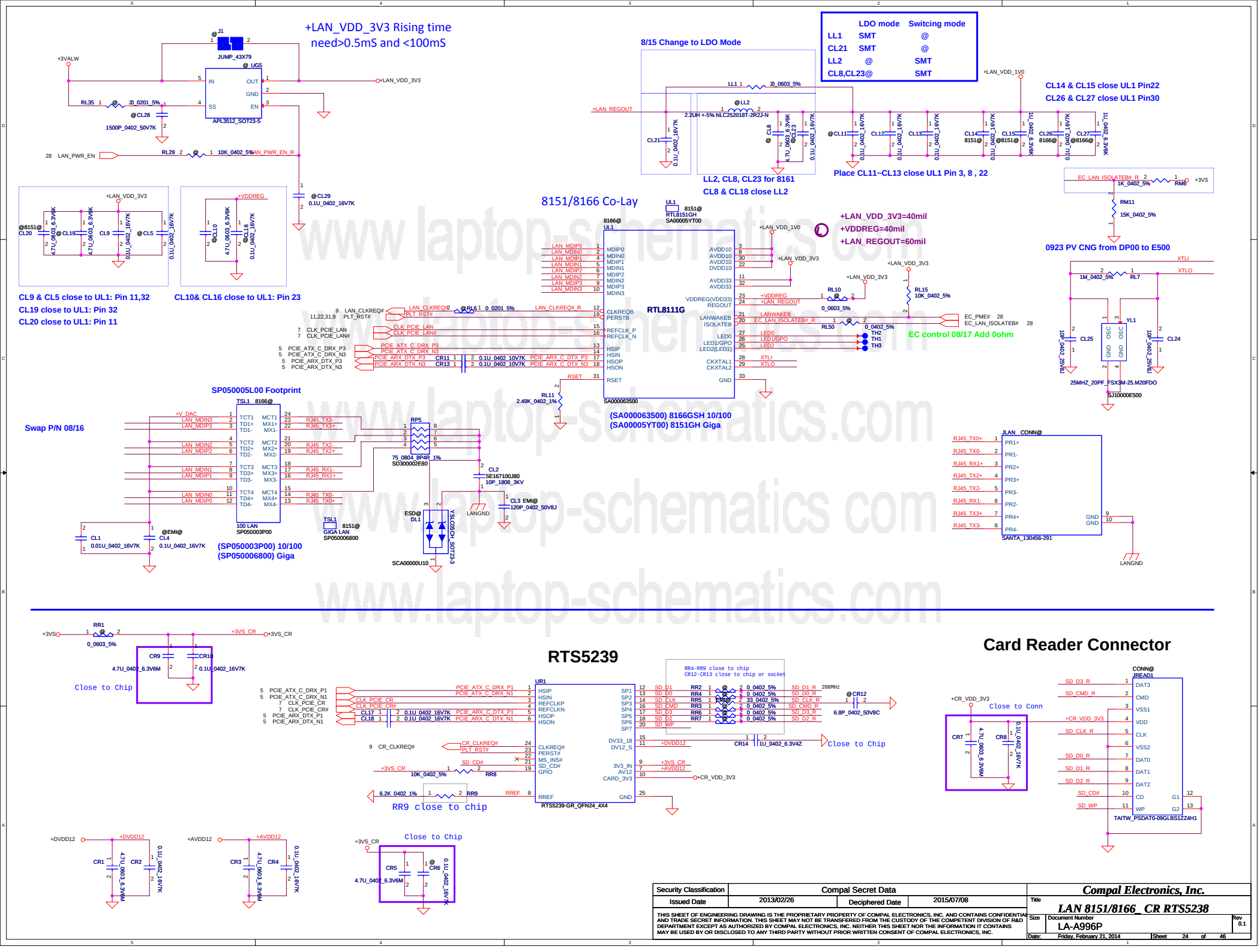

Security Classification	Compal Secret Data		
Issued Date	2013/02/26	Deciphered Date	2015/07/08

THIS SHEET OF ENGINEERING DRAWING IS THE PROPRIETARY PROPERTY OF COMPAL ELECTRONICS, INC. AND CONTAINS CONFIDENTIAL AND TRADE SECRET INFORMATION. THIS SHEET MAY NOT BE TRANSFERED FROM THE CUSTODY OF THE COMPETENT DIVISION OF R&D DEPARTMENT EXCEPT AS AUTHORIZED BY COMPAL ELECTRONICS, INC. NEITHER THIS SHEET NOR THE INFORMATION IT CONTAINS MAY BE USED BY OR DISCLOSED TO ANY THIRD PARTY WITHOUT PRIOR WRITTEN CONSENT OF COMPAL ELECTRONICS, INC.

Compal Electronics, Inc.

Title: LAN 8151/8166_ CR RTS5238

Size | Document Number: LA-A996P | Rev: 0.1

Date: Friday, February 21, 2014 | Sheet 24 of 46

www.laptop-schematics.com

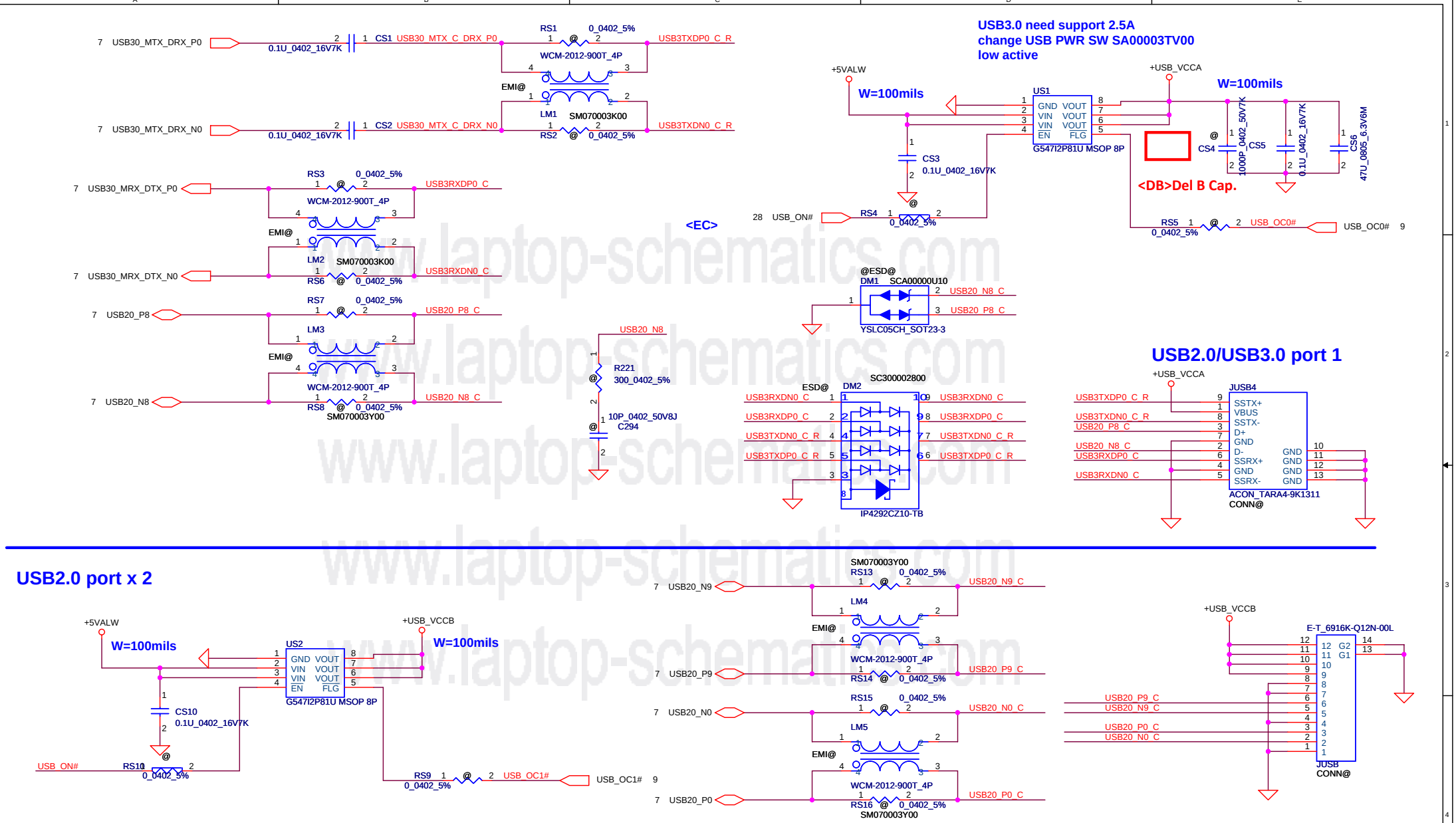

www.laptop-schematics.com

Security Classification	Compal Secret Data			Compal Electronics, Inc.
Issued Date	2013/02/26	Deciphered Date	2015/07/08	Title: USB 3.0/2.0 conn
				Size: B; Document Number: LA-A996P; Rev: 0.1
				Date: Friday, February 21, 2014; Sheet 25 of 46

THIS SHEET OF ENGINEERING DRAWING IS THE PROPRIETARY PROPERTY OF COMPAL ELECTRONICS, INC. AND CONTAINS CONFIDENTIAL AND TRADE SECRET INFORMATION. THIS SHEET MAY NOT BE TRANSFERED FROM THE CUSTODY OF THE COMPETENT DIVISION OF R&D DEPARTMENT EXCEPT AS AUTHORIZED BY COMPAL ELECTRONICS, INC. NEITHER THIS SHEET NOR THE INFORMATION IT CONTAINS MAY BE USED BY OR DISCLOSED TO ANY THIRD PARTY WITHOUT PRIOR WRITTEN CONSENT OF COMPAL ELECTRONICS, INC.

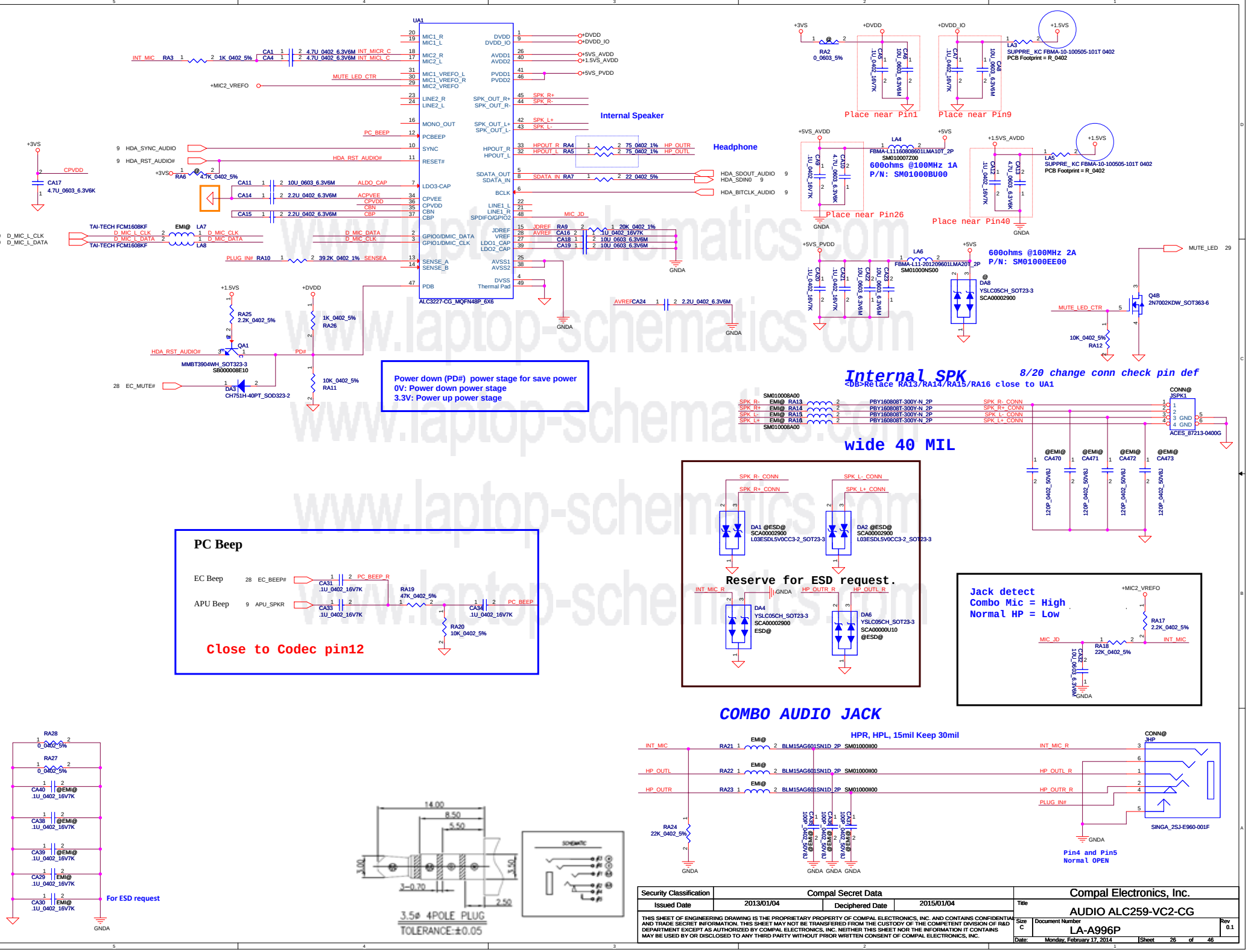

Security Classification	Compal Secret Data		
Issued Date	2013/01/04	Deciphered Date	2015/01/04

THIS SHEET OF ENGINEERING DRAWING IS THE PROPRIETARY PROPERTY OF COMPAL ELECTRONICS, INC. AND CONTAINS CONFIDENTIAL AND TRADE SECRET INFORMATION. THIS SHEET MAY NOT BE TRANSFERED FROM THE CUSTODY OF THE COMPETENT DIVISION OF R&D DEPARTMENT EXCEPT AS AUTHORIZED BY COMPAL ELECTRONICS, INC. NEITHER THIS SHEET NOR THE INFORMATION IT CONTAINS MAY BE USED BY OR DISCLOSED TO ANY THIRD PARTY WITHOUT PRIOR WRITTEN CONSENT OF COMPAL ELECTRONICS, INC.

Compal Electronics, Inc.

Title: AUDIO ALC259-VC2-CG

Size: C | Document Number: LA-A996P | Rev: 0.1

Date: Monday, February 17, 2014 | Sheet 26 of 46

JPHW7 need to short

Layout note
Close to Pin3

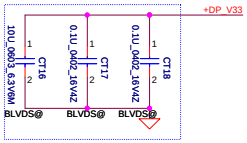

Layout note
Close to LT5 Close to Pin18 Close to Pin13

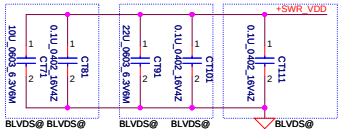

Layout note
Close to Pin11 Close to Pin27 Close to Pin7

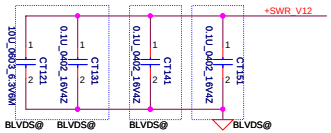

※ROM only mode : PIN 30 4.7k pull low, Pin 31 4.7k pull high.
EP mode : PIN 30 4.7k pull high, Pin 31 4.7k pull low.
EEPROM : PIN 30 4.7k pull high, Pin 31 4.7k pull high.
〈 ※Default mode 〉

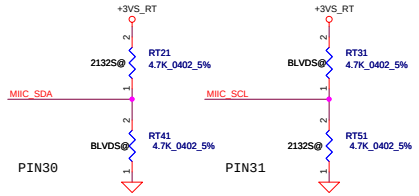

SWR / LDO Mode select

	LDO	SWR
2132S	Do not support	mount LT7
2132N	Use 0 ohm	mount LT7

※ If use 2132N, please select LDO mode as default.

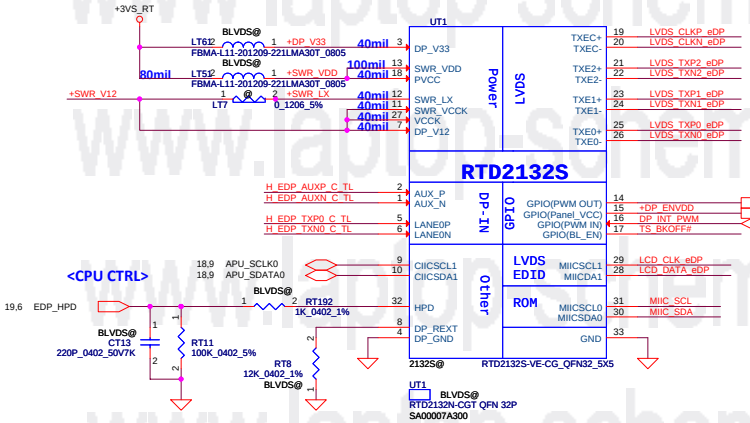

Layout note
Close to Pin8

	display@	EDP@	KLVDS@	BLVDS@	Kabini@	Beema@
Kabini LVDS	V		V		V	
Kabini EDP	V	V			V	
Beema LVDS				V		V
Beema EDP	V	V				V

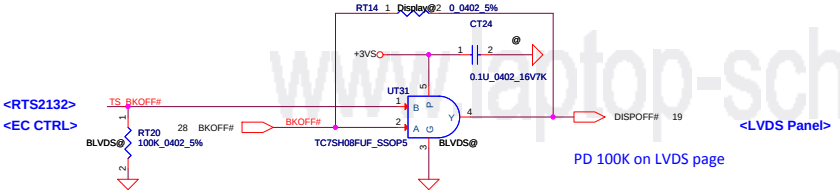

	PIN15
2132S	TL_ENVDD
BLVDS	+LCD_VDD *

* Version R internal Power Switch, can output 1A, Rds(on)=0.2 ohm

PIN16	Accept voltage input (high level)
2132S	3.3V
BLVDS	1.5~3.3V

* Version R has internal level shifter, remove level shifter circuit on AMD platform

Different between 2132S and 2132N(BLVDS)	
2132S	2132N
1. Support SWR mode	1. Support LDO mode and SWR mode 2. Internal ROM 3. Support LCD_VDD(internal Power switch) 4. Integrates Level shifter

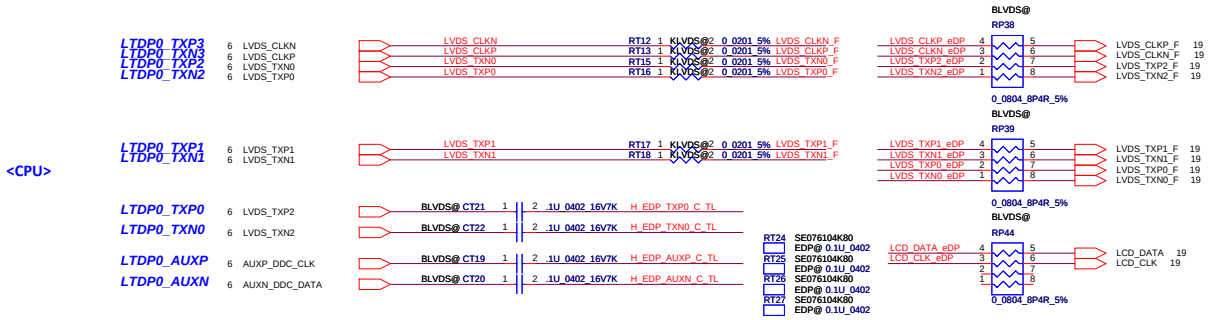

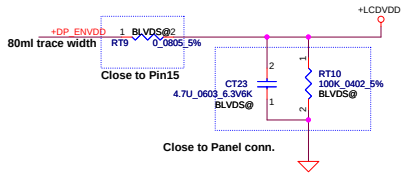

RP40 Close CPU

LVDS_TXP2	RT33	Display@2	0_0402_5%	LVDS_TXP2_K	RT24	KLVDS@2	0_0402_5%	LVDS_TXP2_F
LVDS_TXN2	RT34	Display@2	0_0402_5%	LVDS_TXN2_K	RT25	KLVDS@2	0_0402_5%	LVDS_TXN2_F
AUXP_DDC_CLK	RT35	Display@2	0_0402_5%	AUXP_DDC_CLK_K	RT26	KLVDS@2	0_0402_5%	LCD_CLK
AUXN_DDC_DATA	RT36	Display@2	0_0402_5%	AUXN_DDC_DATA_K	RT27	KLVDS@2	0_0402_5%	LCD_DATA

RT24~27 Close JLVDS conn

Security Classification	Compal Secret Data	
Issued Date	2013/02/26	Deciphered Date 2015/07/08

THIS SHEET OF ENGINEERING DRAWING IS THE PROPRIETARY PROPERTY OF COMPAL ELECTRONICS, INC. AND CONTAINS CONFIDENTIAL AND TRADE SECRET INFORMATION. THIS SHEET MAY NOT BE TRANSFERED FROM THE CUSTODY OF THE COMPETENT DIVISION OF R&D DEPARTMENT EXCEPT AS AUTHORIZED BY COMPAL ELECTRONICS, INC. NEITHER THIS SHEET NOR THE INFORMATION IT CONTAINS MAY BE USED BY OR DISCLOSED TO ANY THIRD PARTY WITHOUT PRIOR WRITTEN CONSENT OF COMPAL ELECTRONICS, INC.

Compal Electronics, Inc.

Title: eDP to LVDS

Size | Document Number | Rev 0.1

Date: Wednesday, February 19, 2014 | Sheet 27 of 46

www.laptop-schematics.com

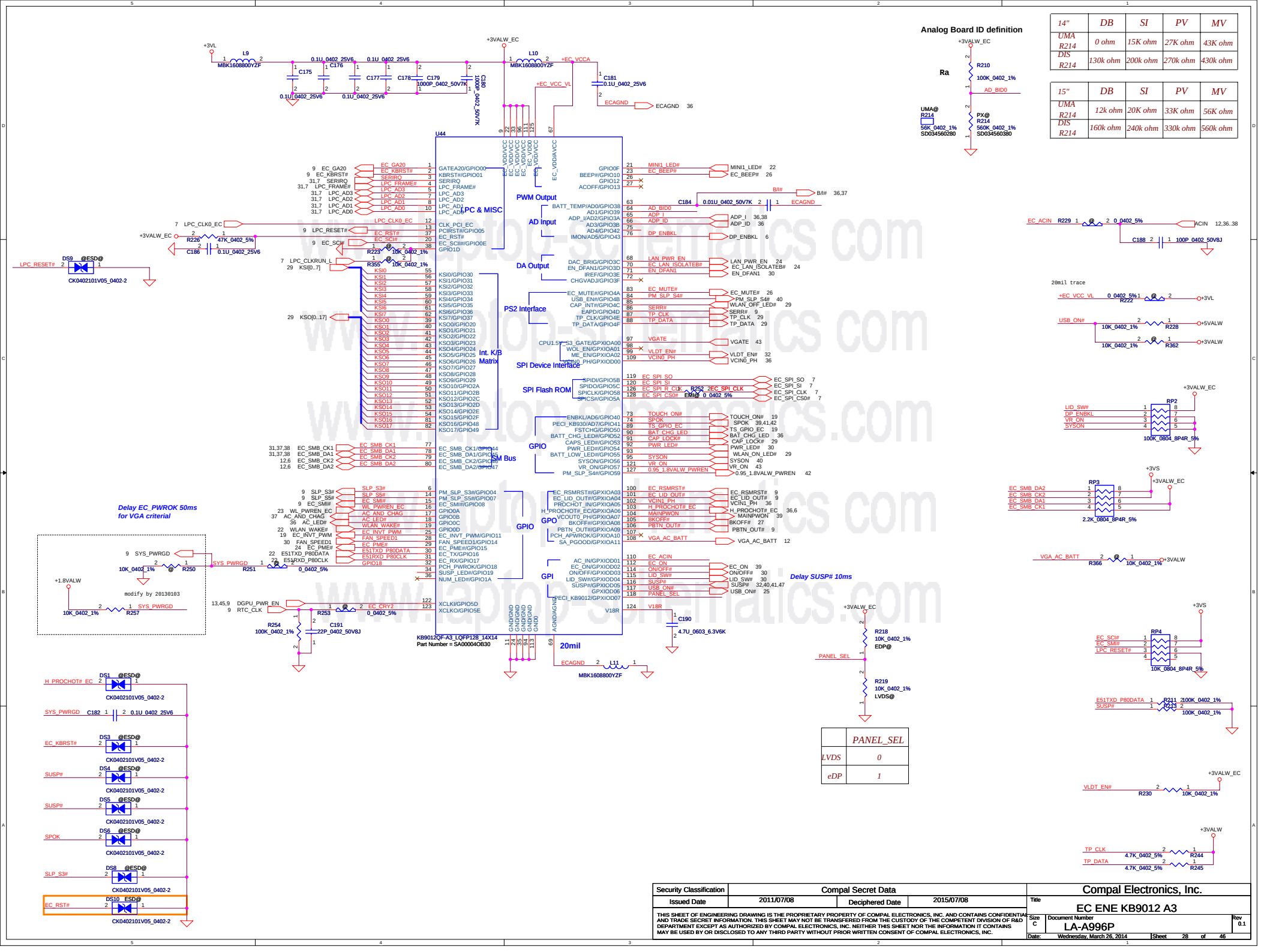

14"	DB	SI	PV	MV
UMA R214	0 ohm	15K ohm	27K ohm	43K ohm
DIS R214	130k ohm	200k ohm	270k ohm	430k ohm

15"	DB	SI	PV	MV
UMA R214	12k ohm	20K ohm	33K ohm	56K ohm
DIS R214	160k ohm	240k ohm	330k ohm	560k ohm

	PANEL_SEL
LVDS	0
eDP	1

www.laptop-schematics.com

Security Classification	Compal Secret Data		
Issued Date	2011/07/08	Deciphered Date	2015/07/08

THIS SHEET OF ENGINEERING DRAWING IS THE PROPRIETARY PROPERTY OF COMPAL ELECTRONICS, INC. AND CONTAINS CONFIDENTIAL AND TRADE SECRET INFORMATION. THIS SHEET MAY NOT BE TRANSFERED FROM THE CUSTODY OF THE COMPETENT DIVISION OF R&D DEPARTMENT EXCEPT AS AUTHORIZED BY COMPAL ELECTRONICS, INC. NEITHER THIS SHEET NOR THE INFORMATION IT CONTAINS MAY BE USED BY OR DISCLOSED TO ANY THIRD PARTY WITHOUT PRIOR WRITTEN CONSENT OF COMPAL ELECTRONICS, INC.

Compal Electronics, Inc.

Title: EC ENE KB9012 A3

Size: C | Document Number: LA-A996P | Rev: 0.1

Date: Wednesday, March 26, 2014 | Sheet 28 of 46

Keyboard conn

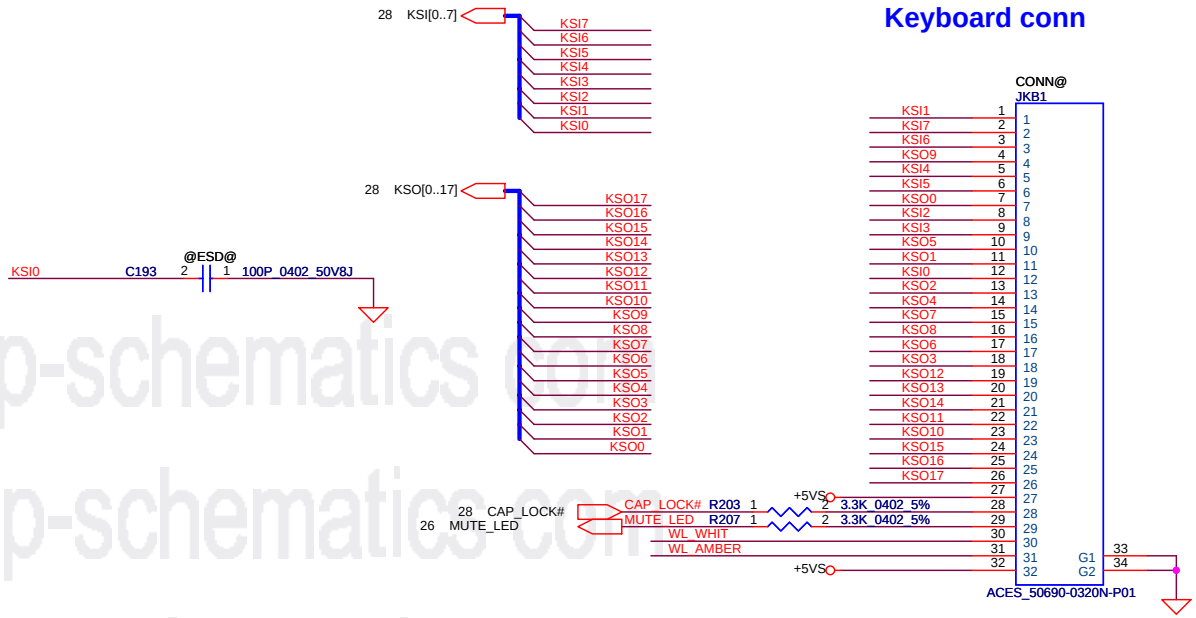

Touch pad conn

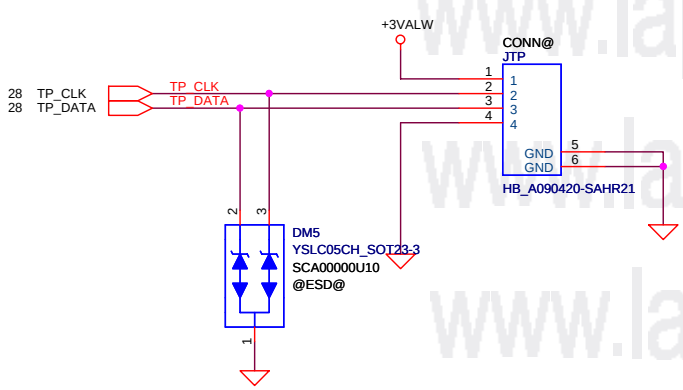

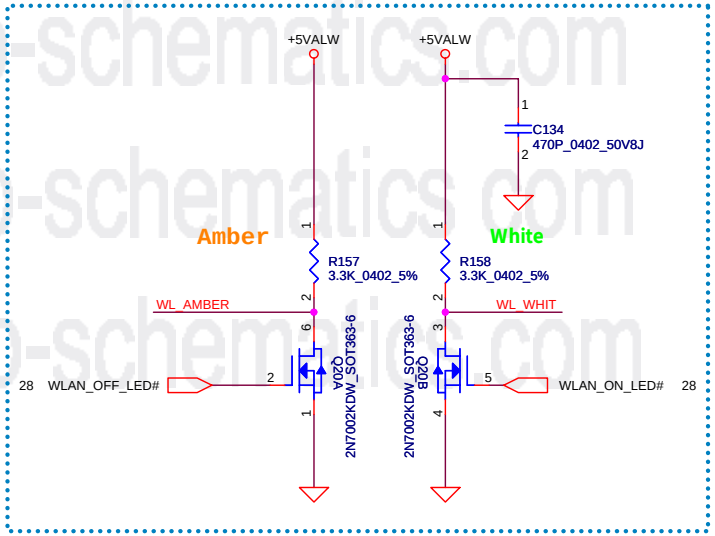

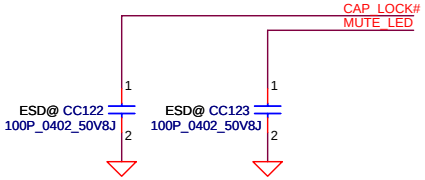

www.laptop-schematics.com

Security Classification	Compal Secret Data			Compal Electronics, Inc.
Issued Date	2013/02/26	Deciphered Date	2015/07/08	Title: KB/TP
				Size: B; Document Number: LA-A996P; Rev: 0.1
				Date: Monday, February 17, 2014; Sheet 29 of 46

THIS SHEET OF ENGINEERING DRAWING IS THE PROPRIETARY PROPERTY OF COMPAL ELECTRONICS, INC. AND CONTAINS CONFIDENTIAL AND TRADE SECRET INFORMATION. THIS SHEET MAY NOT BE TRANSFERED FROM THE CUSTODY OF THE COMPETENT DIVISION OF R&D DEPARTMENT EXCEPT AS AUTHORIZED BY COMPAL ELECTRONICS, INC. NEITHER THIS SHEET NOR THE INFORMATION IT CONTAINS MAY BE USED BY OR DISCLOSED TO ANY THIRD PARTY WITHOUT PRIOR WRITTEN CONSENT OF COMPAL ELECTRONICS, INC.

Powert Button Connector

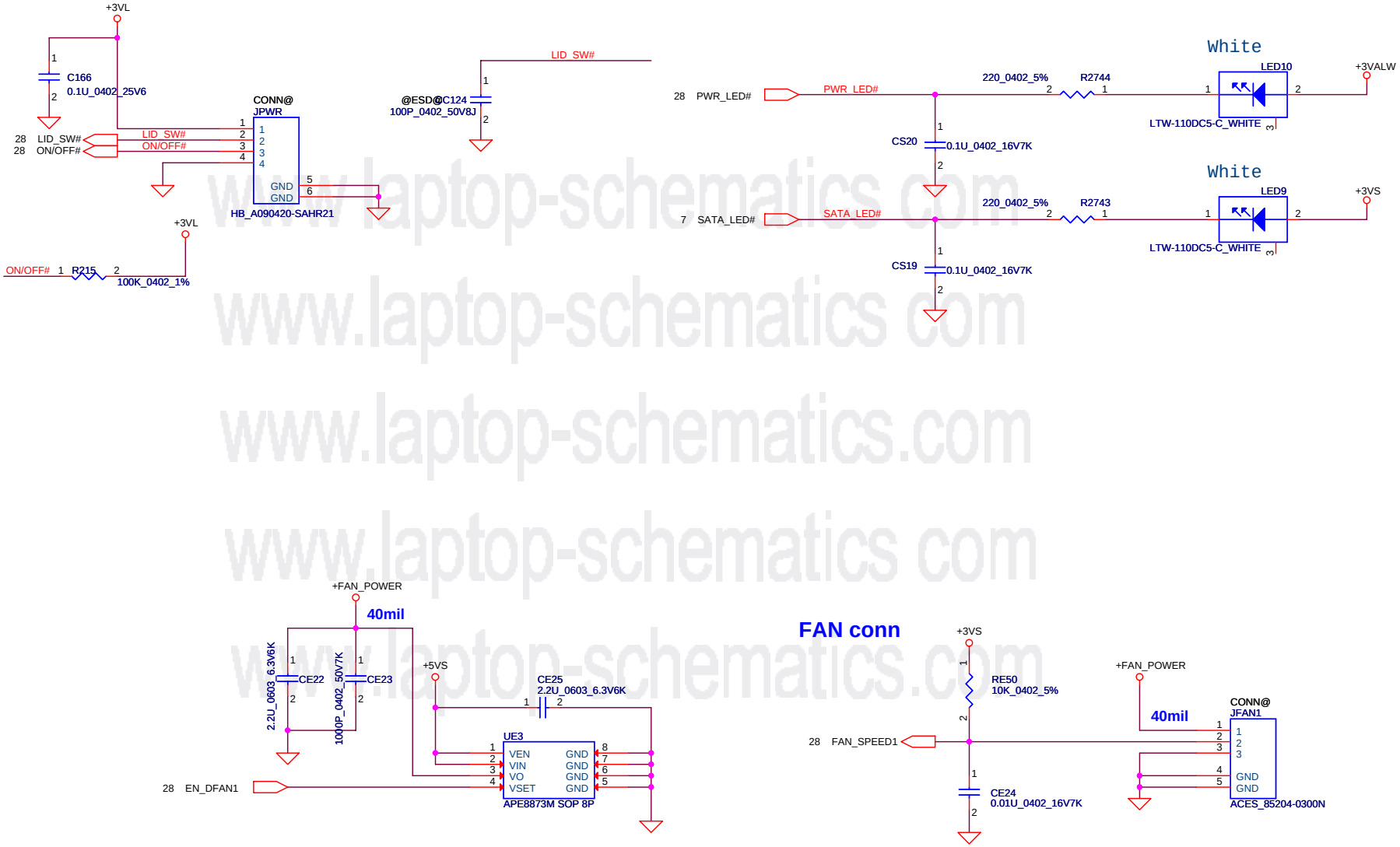

www.laptop-schematics.com

Security Classification	Compal Secret Data		
Issued Date	2013/02/26	Deciphered Date	2015/07/08

THIS SHEET OF ENGINEERING DRAWING IS THE PROPRIETARY PROPERTY OF COMPAL ELECTRONICS, INC. AND CONTAINS CONFIDENTIAL AND TRADE SECRET INFORMATION. THIS SHEET MAY NOT BE TRANSFERED FROM THE CUSTODY OF THE COMPETENT DIVISION OF R&D DEPARTMENT EXCEPT AS AUTHORIZED BY COMPAL ELECTRONICS, INC. NEITHER THIS SHEET NOR THE INFORMATION IT CONTAINS MAY BE USED BY OR DISCLOSED TO ANY THIRD PARTY WITHOUT PRIOR WRITTEN CONSENT OF COMPAL ELECTRONICS, INC.

Compal Electronics, Inc.

Title: PWRBTN/FAN

Size: B | Document Number: LA-A996P | Rev: 0.1

Date: Monday, February 17, 2014 | Sheet 30 of 46

ACCELEROMETER

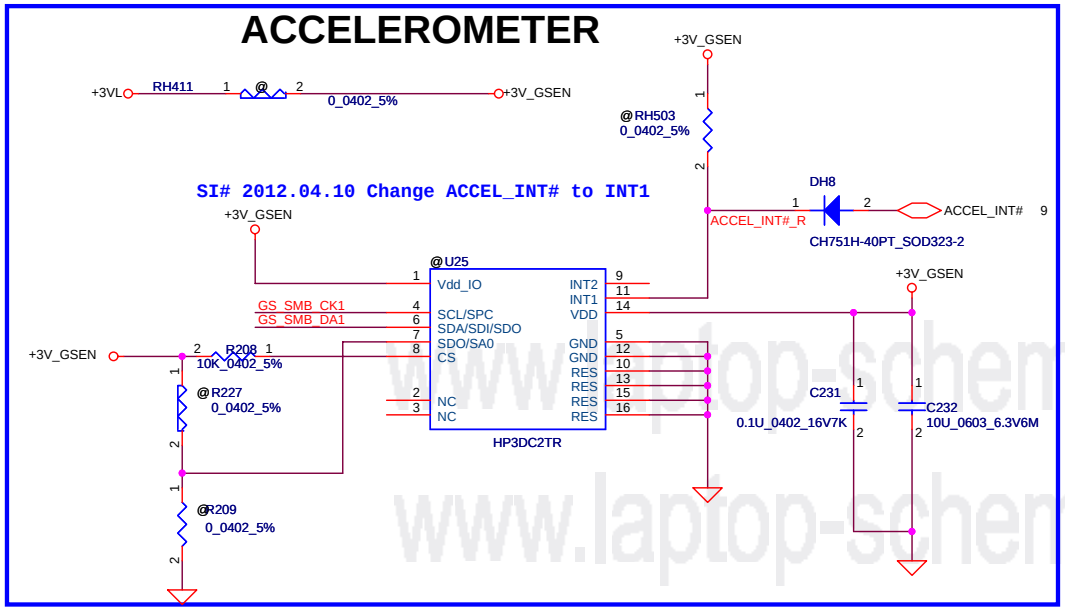

Add TPM Circuit in PV Phase

TPM1.2

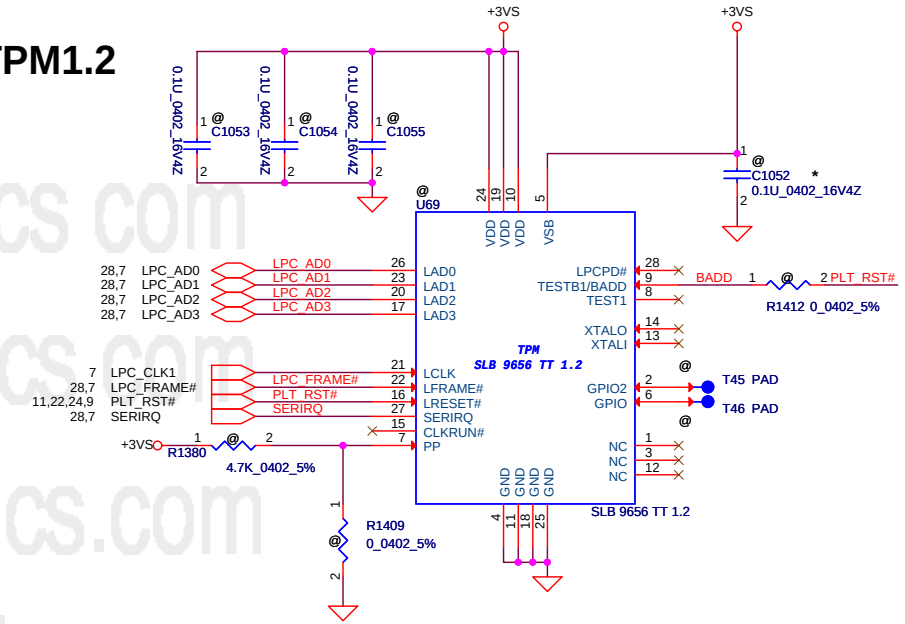

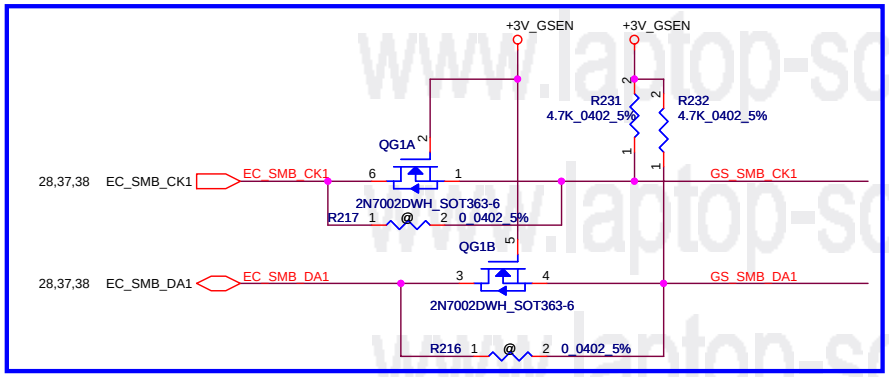

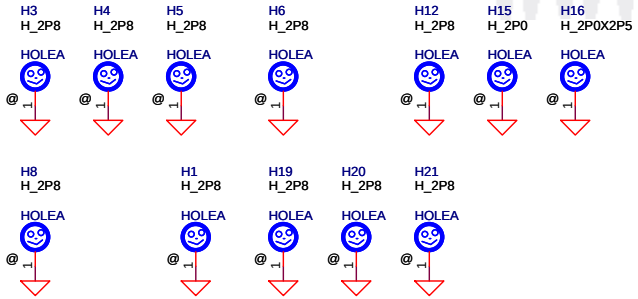

VGA

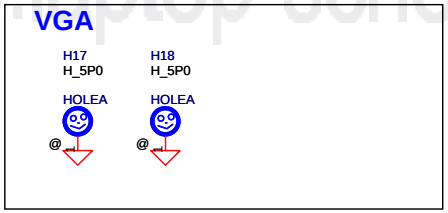

CPU

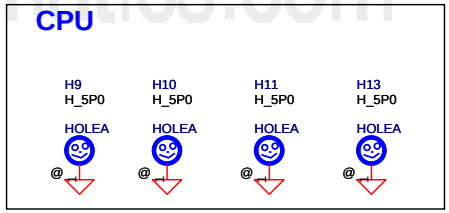

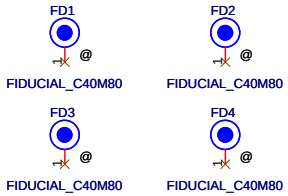

Security Classification	Compal Secret Data		
Issued Date	2013/02/26	Deciphered Date	2015/07/08

THIS SHEET OF ENGINEERING DRAWING IS THE PROPRIETARY PROPERTY OF COMPAL ELECTRONICS, INC. AND CONTAINS CONFIDENTIAL AND TRADE SECRET INFORMATION. THIS SHEET MAY NOT BE TRANSFERED FROM THE CUSTODY OF THE COMPETENT DIVISION OF R&D DEPARTMENT EXCEPT AS AUTHORIZED BY COMPAL ELECTRONICS, INC. NEITHER THIS SHEET NOR THE INFORMATION IT CONTAINS MAY BE USED BY OR DISCLOSED TO ANY THIRD PARTY WITHOUT PRIOR WRITTEN CONSENT OF COMPAL ELECTRONICS, INC.

Compal Electronics, Inc.

Title: **LED/Screw hole**

Size | Document Number: LA-A996P | Rev: 0.1

Date: Monday, February 17, 2014 | Sheet 31 of 46

www.laptop-schematics.com

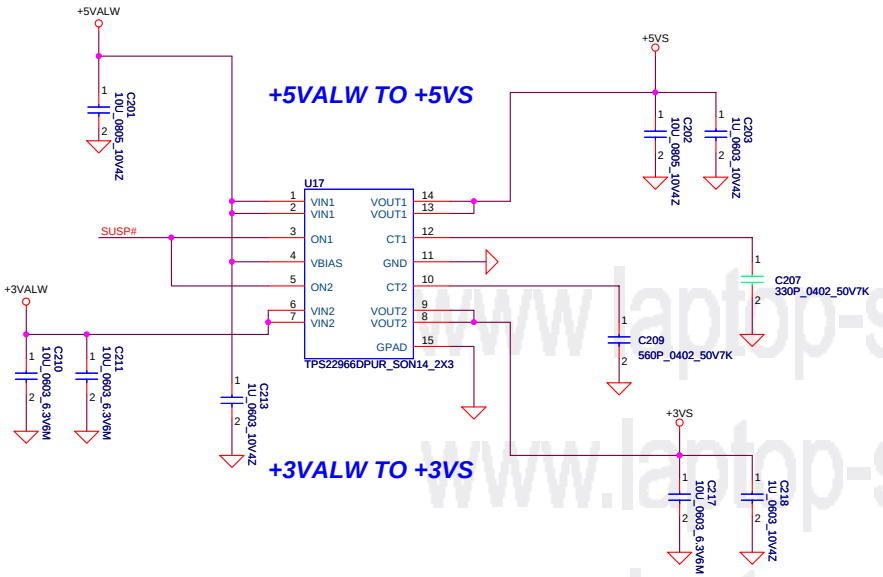

+1.8V TO +1.8VS (5A)

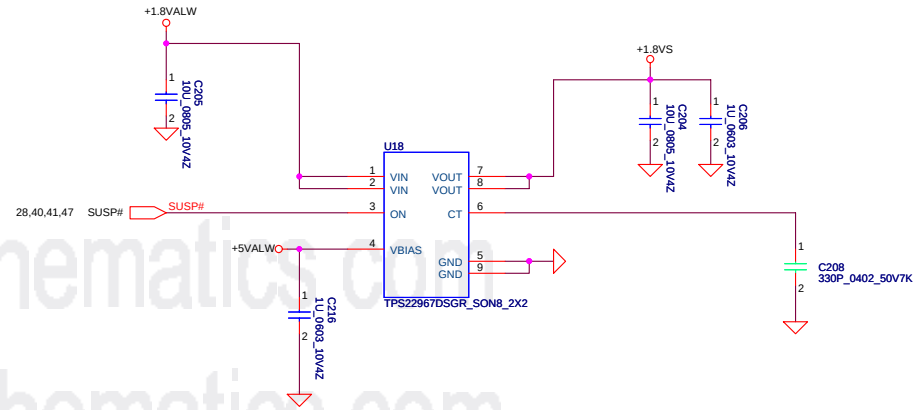

+1.5V TO +1.5VS (2A)

+0.95V TO +0.95VS (4A)

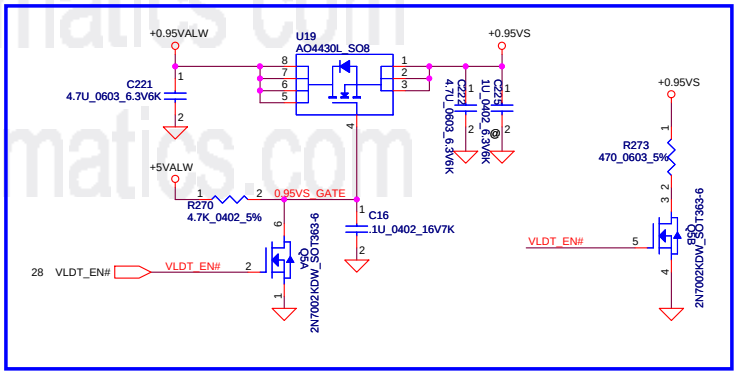

www.laptop-schematics.com

Security Classification	Compal Secret Data			Compal Electronics, Inc.
Issued Date	2013/02/26	Deciphered Date	2015/07/08	Title: DC Interface
				Size: Custom; Document Number; Rev 0.1
				Date: Monday, February 17, 2014; Sheet 32 of 46

THIS SHEET OF ENGINEERING DRAWING IS THE PROPRIETARY PROPERTY OF COMPAL ELECTRONICS, INC. AND CONTAINS CONFIDENTIAL AND TRADE SECRET INFORMATION. THIS SHEET MAY NOT BE TRANSFERED FROM THE CUSTODY OF THE COMPETENT DIVISION OF R&D DEPARTMENT EXCEPT AS AUTHORIZED BY COMPAL ELECTRONICS, INC. NEITHER THIS SHEET NOR THE INFORMATION IT CONTAINS MAY BE USED BY OR DISCLOSED TO ANY THIRD PARTY WITHOUT PRIOR WRITTEN CONSENT OF COMPAL ELECTRONICS, INC.

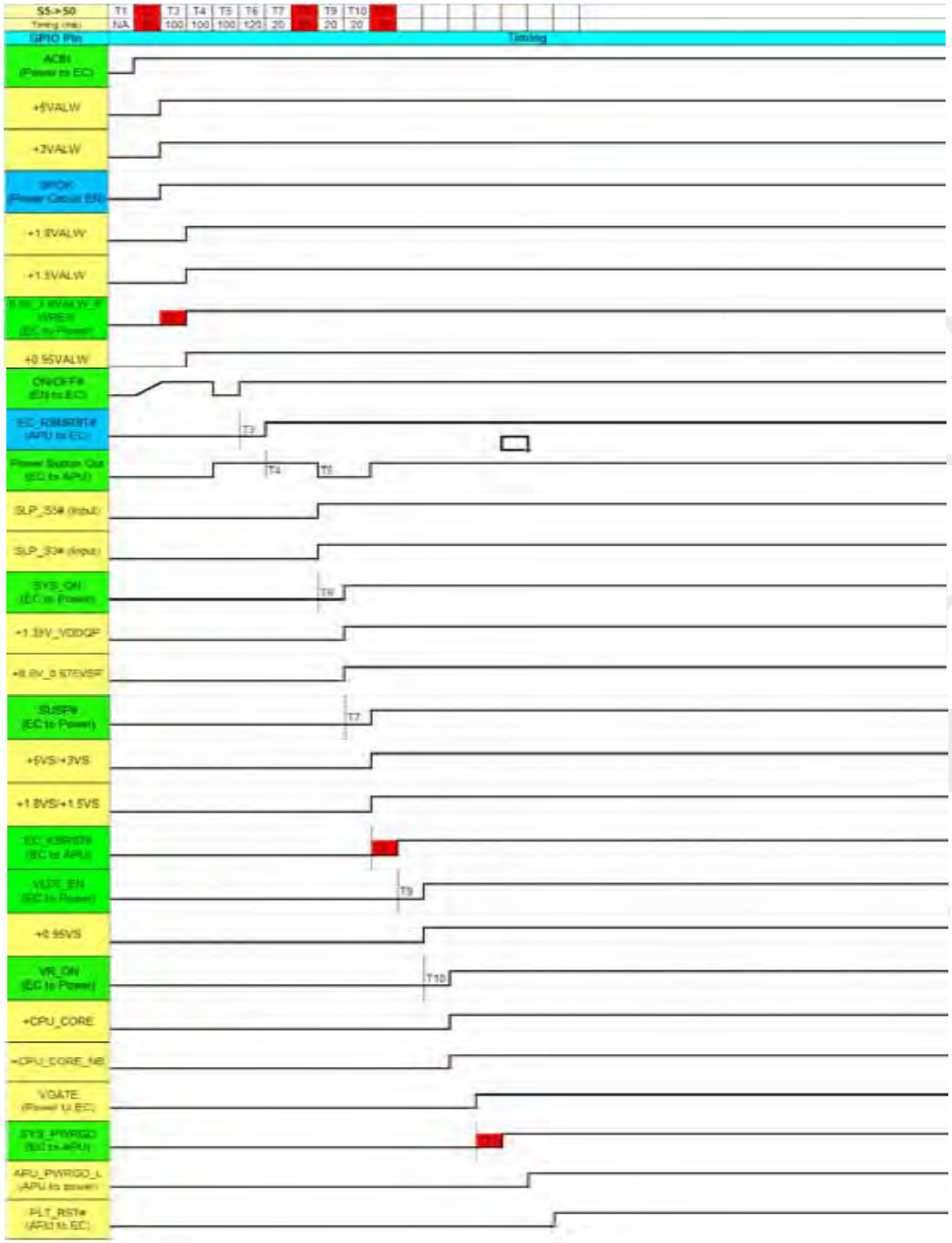

hematics com
hematics com
hematics.com
hematics com
hematics.com

Security Classification	Compal Secret Data			Compal Electronics, Inc.
Issued Date	2013/02/26	Deciphered Date	2015/07/08	Title: Power sequence

THIS SHEET OF ENGINEERING DRAWING IS THE PROPRIETARY PROPERTY OF COMPAL ELECTRONICS, INC. AND CONTAINS CONFIDENTIAL AND TRADE SECRET INFORMATION. THIS SHEET MAY NOT BE TRANSFERED FROM THE CUSTODY OF THE COMPETENT DIVISION OF R&D DEPARTMENT EXCEPT AS AUTHORIZED BY COMPAL ELECTRONICS, INC. NEITHER THIS SHEET NOR THE INFORMATION IT CONTAINS MAY BE USED BY OR DISCLOSED TO ANY THIRD PARTY WITHOUT PRIOR WRITTEN CONSENT OF COMPAL ELECTRONICS, INC.

Size	Document Number	Rev
Custom	LA-A996P	0.1

Date: Monday, February 17, 2014 | Sheet 33 of 46

www.laptop-schematics.com
www.laptop-schematics.com
www.laptop-schematics.com
www.laptop-schematics.com
www.laptop-schematics.com

Security Classification	Compal Secret Data		
Issued Date	2013/02/26	Deciphered Date	2015/07/08

THIS SHEET OF ENGINEERING DRAWING IS THE PROPRIETARY PROPERTY OF COMPAL ELECTRONICS, INC. AND CONTAINS CONFIDENTIAL AND TRADE SECRET INFORMATION. THIS SHEET MAY NOT BE TRANSFERED FROM THE CUSTODY OF THE COMPETENT DIVISION OF R&D DEPARTMENT EXCEPT AS AUTHORIZED BY COMPAL ELECTRONICS, INC. NEITHER THIS SHEET NOR THE INFORMATION IT CONTAINS MAY BE USED BY OR DISCLOSED TO ANY THIRD PARTY WITHOUT PRIOR WRITTEN CONSENT OF COMPAL ELECTRONICS, INC.

Compal Electronics, Inc.

Title: EE Change list

Size: Custom | Document Number: LA-A996P | Rev: 0.1

Date: Monday, February 17, 2014 | Sheet 34 of 46

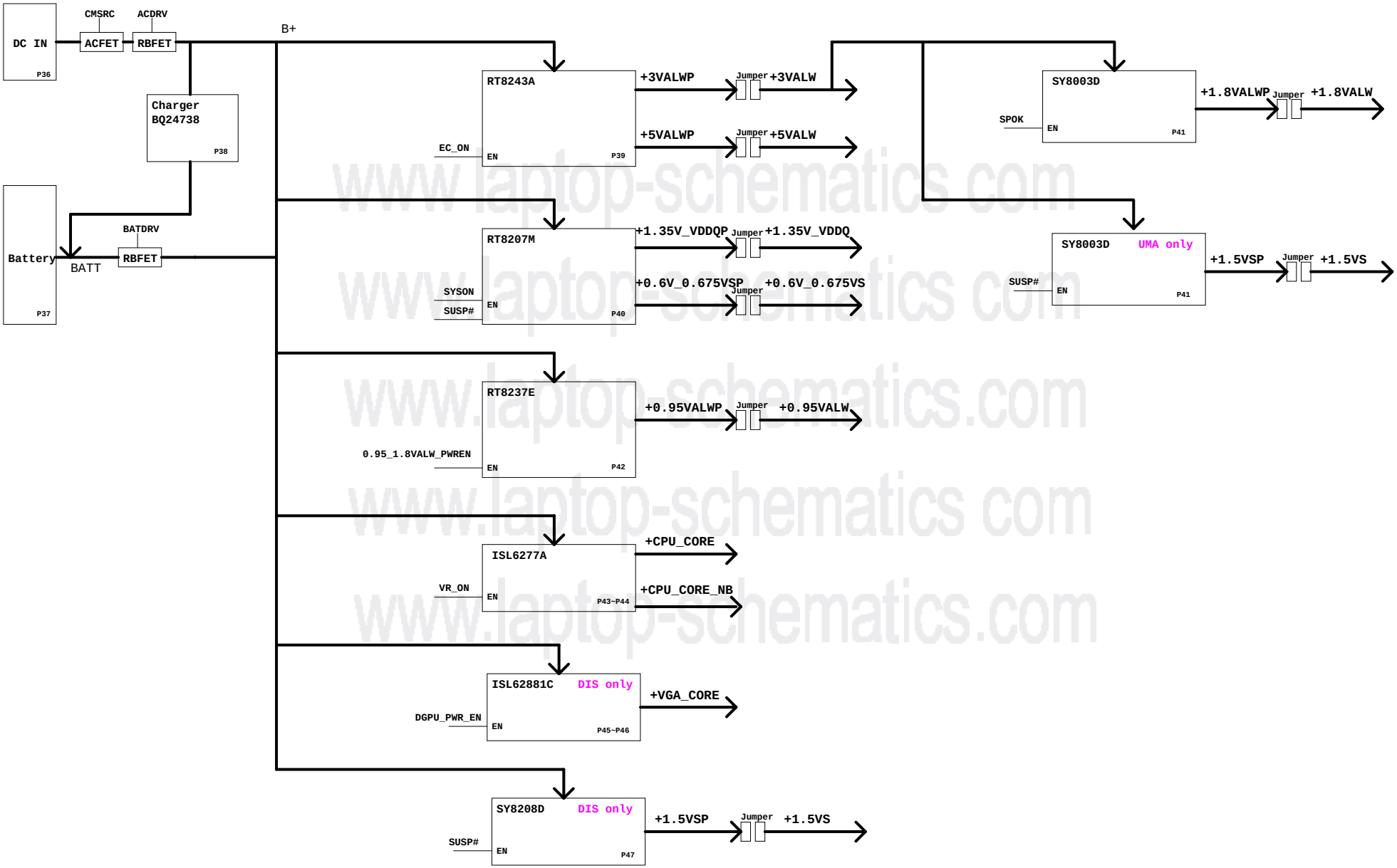

www.laptop-schematics.com

Security Classification	Compal Secret Data		
Issued Date	2012/04/03	Deciphered Date	2014/12/31

THIS SHEET OF ENGINEERING DRAWING IS THE PROPRIETARY PROPERTY OF COMPAL ELECTRONICS, INC. AND CONTAINS CONFIDENTIAL AND TRADE SECRET INFORMATION. THIS SHEET MAY NOT BE TRANSFERED FROM THE CUSTODY OF THE COMPETENT DIVISION OF R&D DEPARTMENT EXCEPT AS AUTHORIZED BY COMPAL ELECTRONICS, INC. NEITHER THIS SHEET NOR THE INFORMATION IT CONTAINS MAY BE USED BY OR DISCLOSED TO ANY THIRD PARTY WITHOUT PRIOR WRITTEN CONSENT OF COMPAL ELECTRONICS, INC.

Compal Electronics, Inc.

Title: ***Power Block Diagram***

Size | Document Number: **LA-A996P** | Rev: 0.1

Date: Tuesday, February 25, 2014 | Sheet 35 of 47

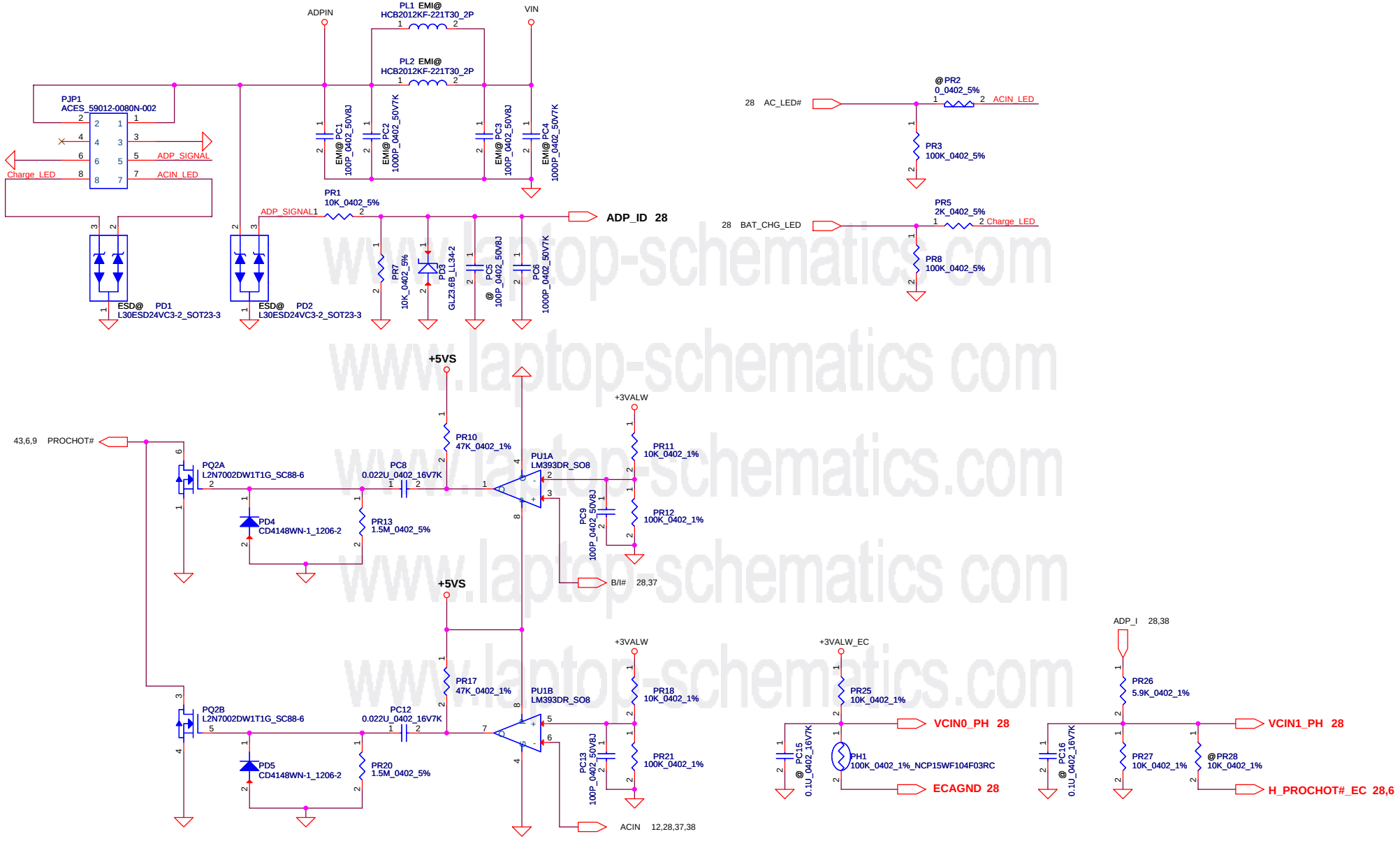

www.laptop-schematics.com

Security Classification	Compal Secret Data			Compal Electronics, Inc.
Issued Date	2013/08/07	Deciphered Date	2016/08/06	Title: DC Conn
				Size: Document Number: LA-A996P — Rev: 0.1
				Date: Tuesday, February 25, 2014 — Sheet 36 of 47

THIS SHEET OF ENGINEERING DRAWING IS THE PROPRIETARY PROPERTY OF COMPAL ELECTRONICS, INC. AND CONTAINS CONFIDENTIAL AND TRADE SECRET INFORMATION. THIS SHEET MAY NOT BE TRANSFERED FROM THE CUSTODY OF THE COMPETENT DIVISION OF R&D DEPARTMENT EXCEPT AS AUTHORIZED BY COMPAL ELECTRONICS, INC. NEITHER THIS SHEET NOR THE INFORMATION IT CONTAINS MAY BE USED BY OR DISCLOSED TO ANY THIRD PARTY WITHOUT PRIOR WRITTEN CONSENT OF COMPAL ELECTRONICS, INC.

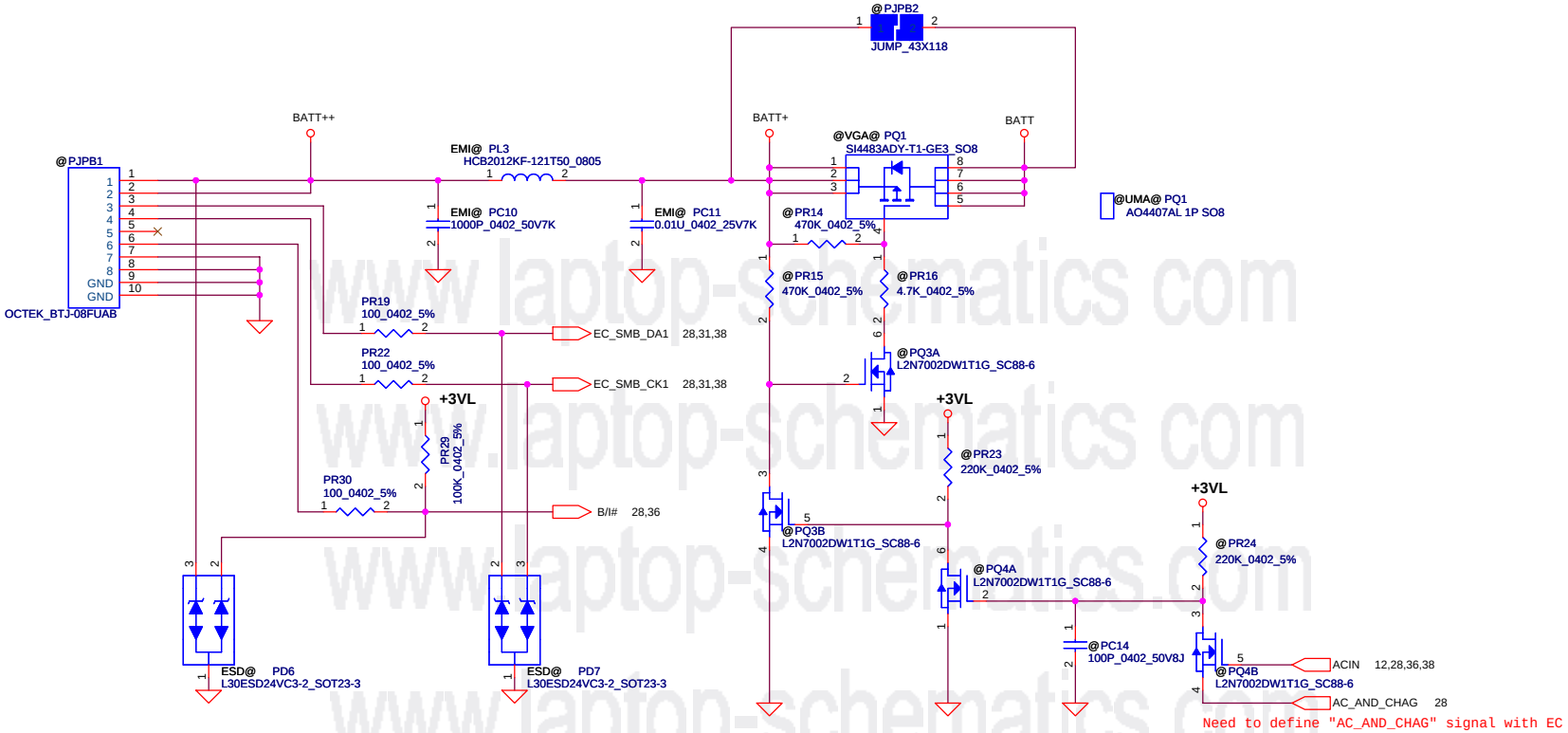

www.laptop-schematics.com

Security Classification	Compal Secret Data			Compal Electronics, Inc.
Issued Date	2013/08/07	Deciphered Date	2016/08/06	Title: *BATT Conn*
				Size / Document Number: LA-A996P	Rev: 0.1
				Date: Tuesday, February 25, 2014	Sheet 37 of 47

THIS SHEET OF ENGINEERING DRAWING IS THE PROPRIETARY PROPERTY OF COMPAL ELECTRONICS, INC. AND CONTAINS CONFIDENTIAL AND TRADE SECRET INFORMATION. THIS SHEET MAY NOT BE TRANSFERED FROM THE CUSTODY OF THE COMPETENT DIVISION OF R&D DEPARTMENT EXCEPT AS AUTHORIZED BY COMPAL ELECTRONICS, INC. NEITHER THIS SHEET NOR THE INFORMATION IT CONTAINS MAY BE USED BY OR DISCLOSED TO ANY THIRD PARTY WITHOUT PRIOR WRITTEN CONSENT OF COMPAL ELECTRONICS, INC.

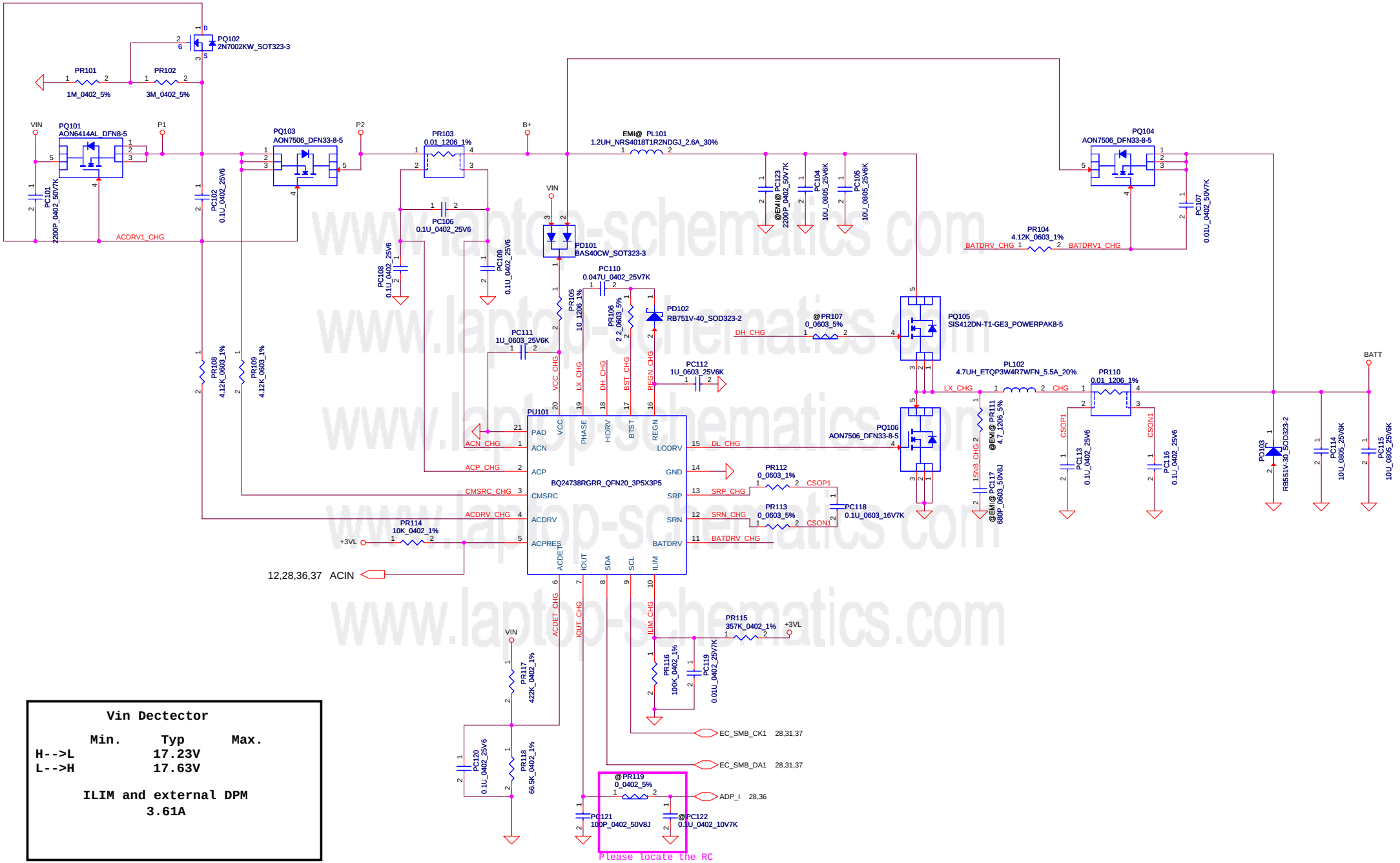

Vin Dectector

	Min.	Typ	Max.
H-->L		17.23V	
L-->H		17.63V	

ILIM and external DPM
3.61A

www.laptop-schematics.com

Security Classification	Compal Secret Data		
Issued Date	2013/08/07	Deciphered Date	2016/08/06

THIS SHEET OF ENGINEERING DRAWING IS THE PROPRIETARY PROPERTY OF COMPAL ELECTRONICS, INC. AND CONTAINS CONFIDENTIAL AND TRADE SECRET INFORMATION. THIS SHEET MAY NOT BE TRANSFERED FROM THE CUSTODY OF THE COMPETENT DIVISION OF R&D DEPARTMENT EXCEPT AS AUTHORIZED BY COMPAL ELECTRONICS, INC. NEITHER THIS SHEET NOR THE INFORMATION IT CONTAINS MAY BE USED BY OR DISCLOSED TO ANY THIRD PARTY WITHOUT PRIOR WRITTEN CONSENT OF COMPAL ELECTRONICS, INC.

Compal Electronics, Inc.

Title: *CHARGER*

Size: Custom | Document Number: LA-A996P | Rev: 0.1

Date: | Sheet 38 of 47

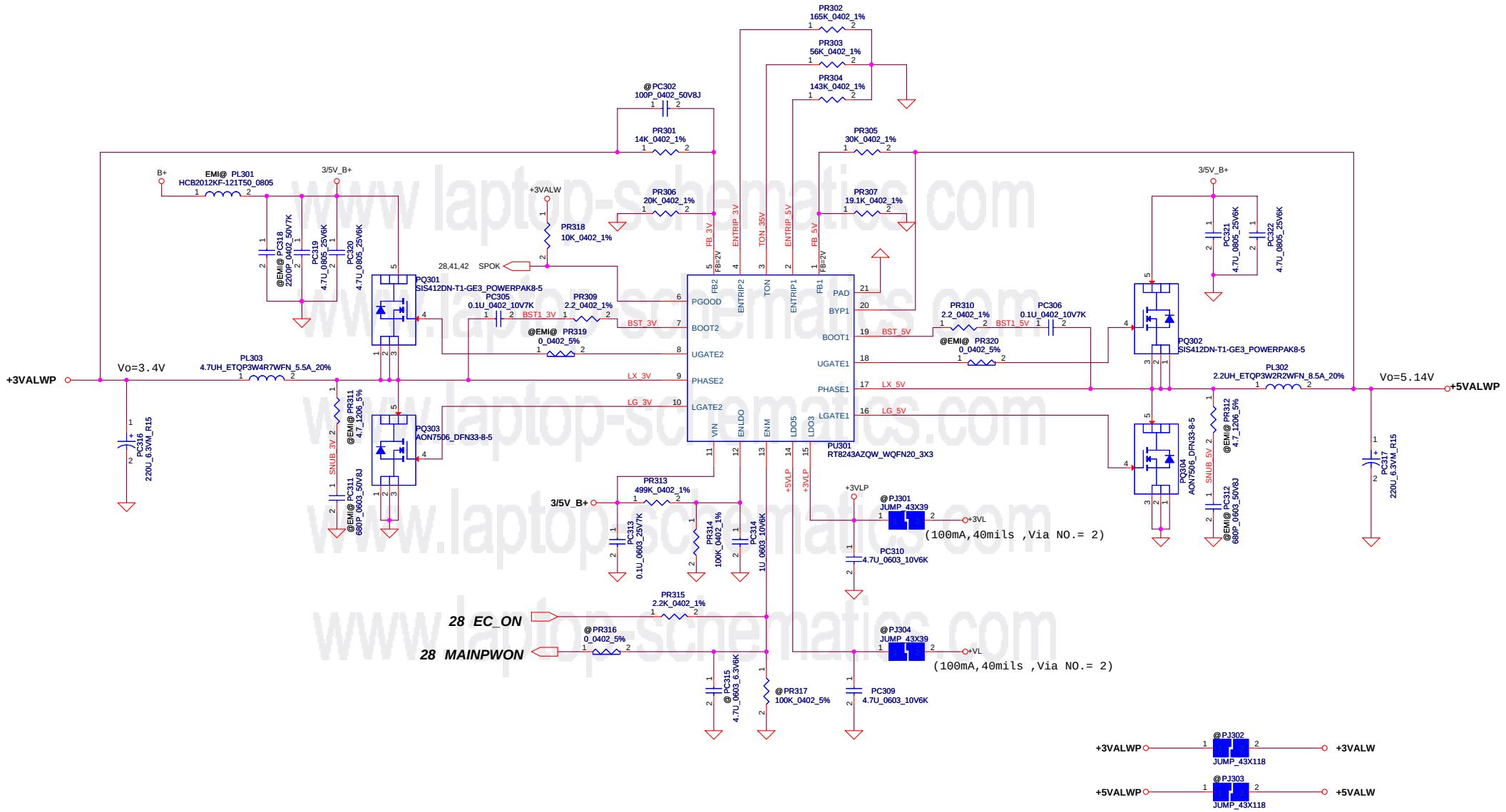

www.laptop-schematics.com

Security Classification	Compal Secret Data		
Issued Date	2013/08/07	Deciphered Date	2016/08/06

THIS SHEET OF ENGINEERING DRAWING IS THE PROPRIETARY PROPERTY OF COMPAL ELECTRONICS, INC. AND CONTAINS CONFIDENTIAL AND TRADE SECRET INFORMATION. THIS SHEET MAY NOT BE TRANSFERED FROM THE CUSTODY OF THE COMPETENT DIVISION OF R&D DEPARTMENT EXCEPT AS AUTHORIZED BY COMPAL ELECTRONICS, INC. NEITHER THIS SHEET NOR THE INFORMATION IT CONTAINS MAY BE USED BY OR DISCLOSED TO ANY THIRD PARTY WITHOUT PRIOR WRITTEN CONSENT OF COMPAL ELECTRONICS, INC.

Compal Electronics, Inc.

Title: *3VALW/5VALW*

Size: Custom | Document Number: LA-A996P | Rev: 0.1

Date: | Sheet 39 of 47

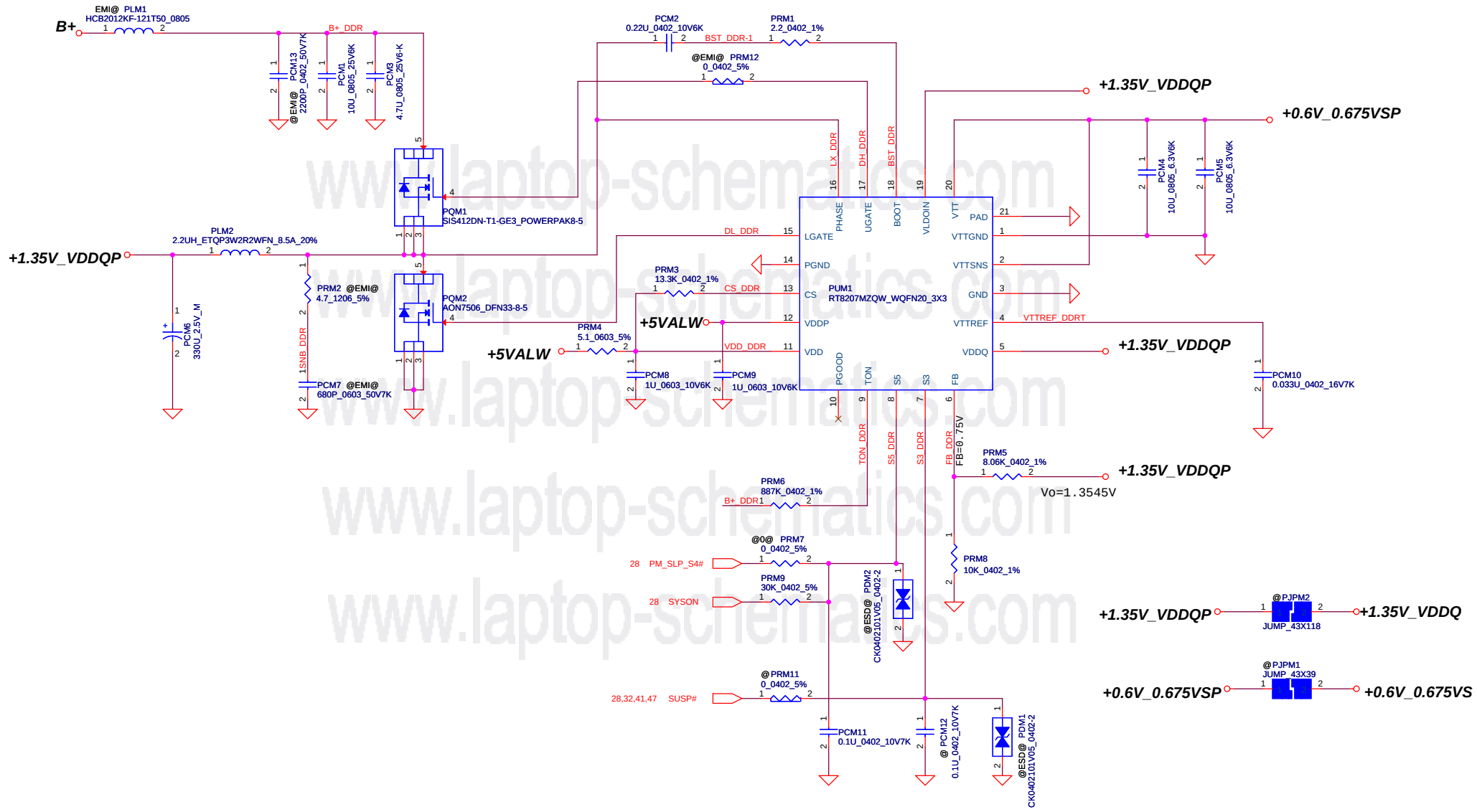

Security Classification	Compal Secret Data		
Issued Date	2013/08/07	Deciphered Date	2016/08/06

THIS SHEET OF ENGINEERING DRAWING IS THE PROPRIETARY PROPERTY OF COMPAL ELECTRONICS, INC. AND CONTAINS CONFIDENTIAL AND TRADE SECRET INFORMATION. THIS SHEET MAY NOT BE TRANSFERED FROM THE CUSTODY OF THE COMPETENT DIVISION OF R&D DEPARTMENT EXCEPT AS AUTHORIZED BY COMPAL ELECTRONICS, INC. NEITHER THIS SHEET NOR THE INFORMATION IT CONTAINS MAY BE USED BY OR DISCLOSED TO ANY THIRD PARTY WITHOUT PRIOR WRITTEN CONSENT OF COMPAL ELECTRONICS, INC.

Compal Electronics, Inc.

Title: **1.35V/0.675VS**

Size: Custom | Document Number: LA-A521P | Rev: 0.1

Date: Tuesday, February 25, 2014 | Sheet 40 of 47

www.laptop-schematics.com

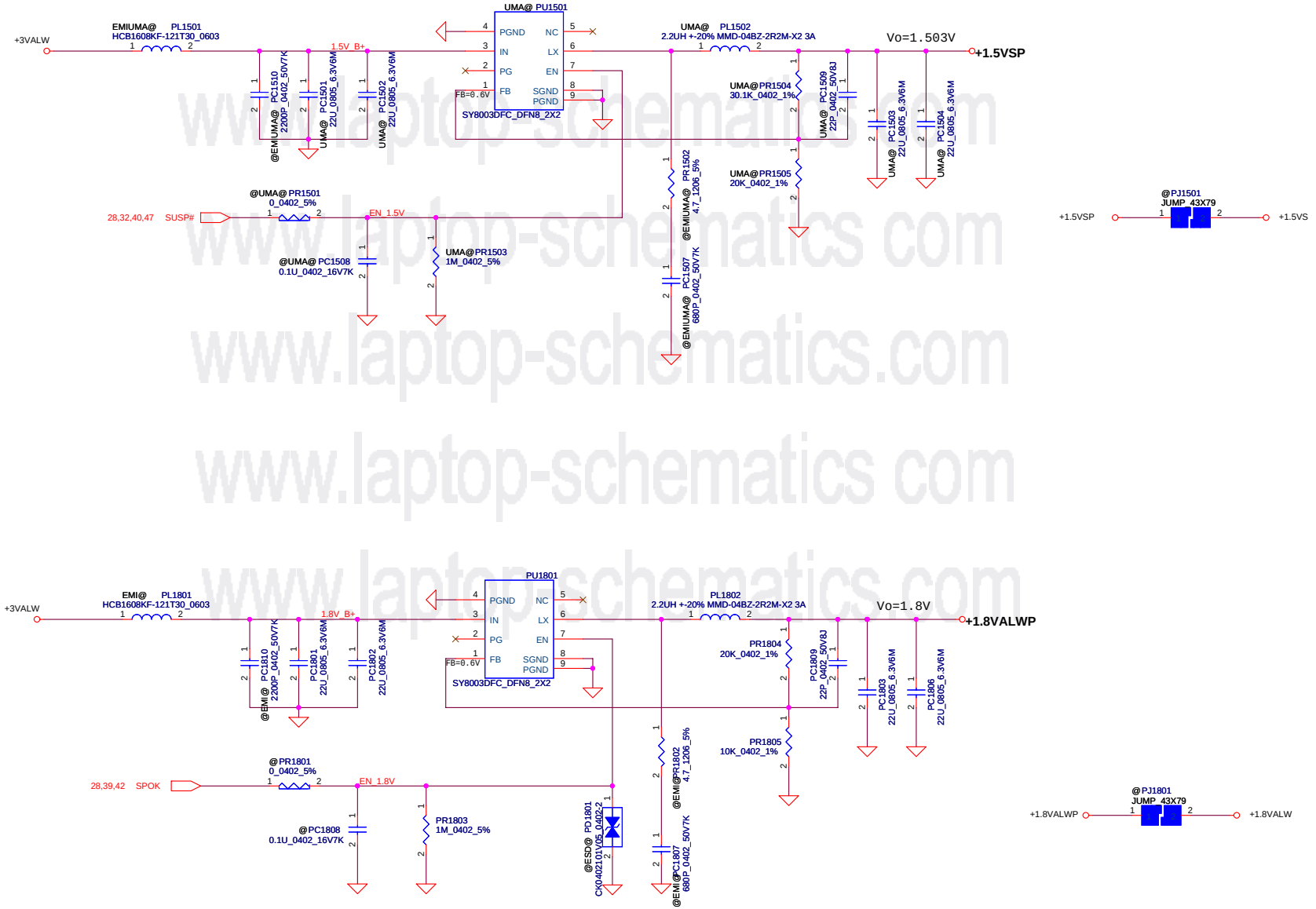

www.laptop-schematics.com

Security Classification	Compal Secret Data		
Issued Date	2013/08/07	Deciphered Date	2016/08/06

THIS SHEET OF ENGINEERING DRAWING IS THE PROPRIETARY PROPERTY OF COMPAL ELECTRONICS, INC. AND CONTAINS CONFIDENTIAL AND TRADE SECRET INFORMATION. THIS SHEET MAY NOT BE TRANSFERED FROM THE CUSTODY OF THE COMPETENT DIVISION OF R&D DEPARTMENT EXCEPT AS AUTHORIZED BY COMPAL ELECTRONICS, INC. NEITHER THIS SHEET NOR THE INFORMATION IT CONTAINS MAY BE USED BY OR DISCLOSED TO ANY THIRD PARTY WITHOUT PRIOR WRITTEN CONSENT OF COMPAL ELECTRONICS, INC.

Compal Electronics, Inc.

Title: *1.5VS/1.8VALW*

Size: Custom | Document Number: LA-A996P | Rev: 0.1

Date: | Sheet 41 of 47

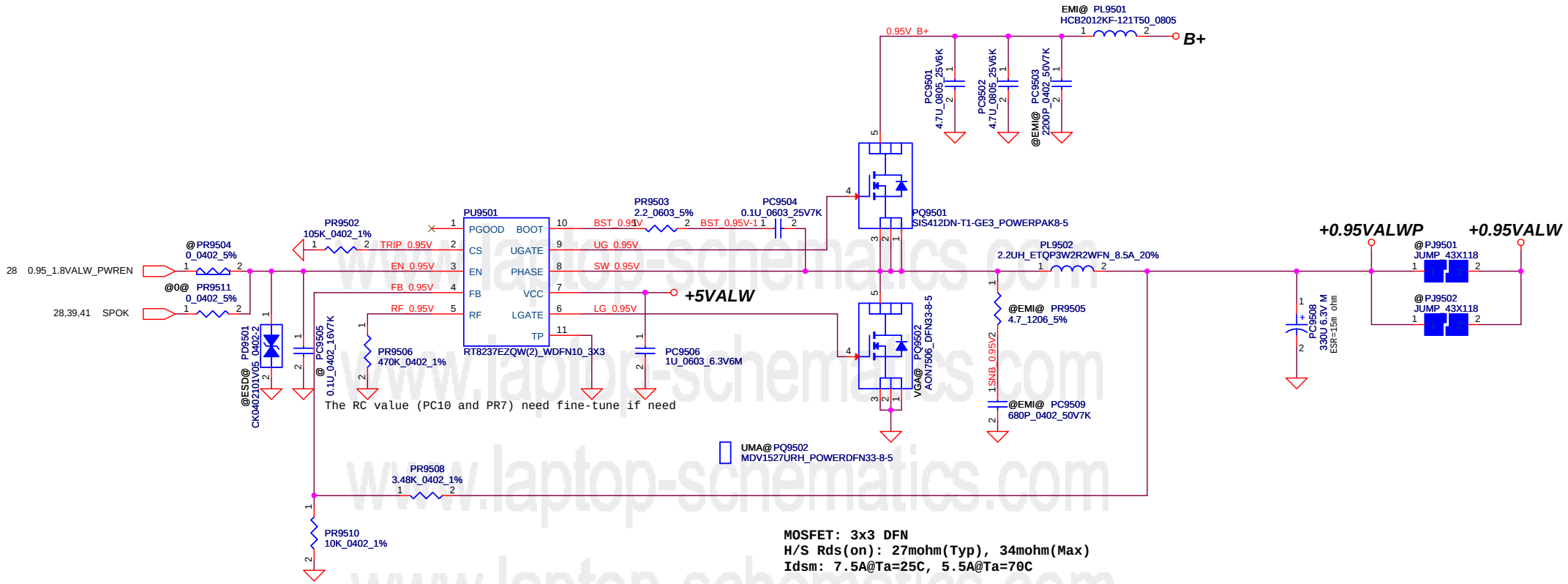

MOSFET: 3x3 DFN
H/S Rds(on): 27mohm(Typ), 34mohm(Max)
Idsm: 7.5A@Ta=25C, 5.5A@Ta=70C

L/S Rds(on): 9.9mohm(Typ), 13mohm(Max)
Idsm: 13.5A@Ta=25C, 11A@Ta=70C

Choke: 7x7x3
Rdc=15.5mohm +/-15%

Switching Frequency: 290kHz
Imax=8A
OCP~10.977A
OVP: 120%~130%
VFB=0.704V, Vout=0.949V
MOSFET footprint: SIS412DN

www.laptop-schematics.com

Security Classification	Compal Secret Data			Compal Electronics, Inc.
Issued Date	2013/08/07	Deciphered Date	2016/08/06	Title: 0.95VALW
				Size: B; Document Number: LA-A996P; Rev: 0.1
				Date: Tuesday, February 25, 2014; Sheet 42 of 47

THIS SHEET OF ENGINEERING DRAWING IS THE PROPRIETARY PROPERTY OF COMPAL ELECTRONICS, INC. AND CONTAINS CONFIDENTIAL AND TRADE SECRET INFORMATION. THIS SHEET MAY NOT BE TRANSFERED FROM THE CUSTODY OF THE COMPETENT DIVISION OF R&D DEPARTMENT EXCEPT AS AUTHORIZED BY COMPAL ELECTRONICS, INC. NEITHER THIS SHEET NOR THE INFORMATION IT CONTAINS MAY BE USED BY OR DISCLOSED TO ANY THIRD PARTY WITHOUT PRIOR WRITTEN CONSENT OF COMPAL ELECTRONICS, INC.

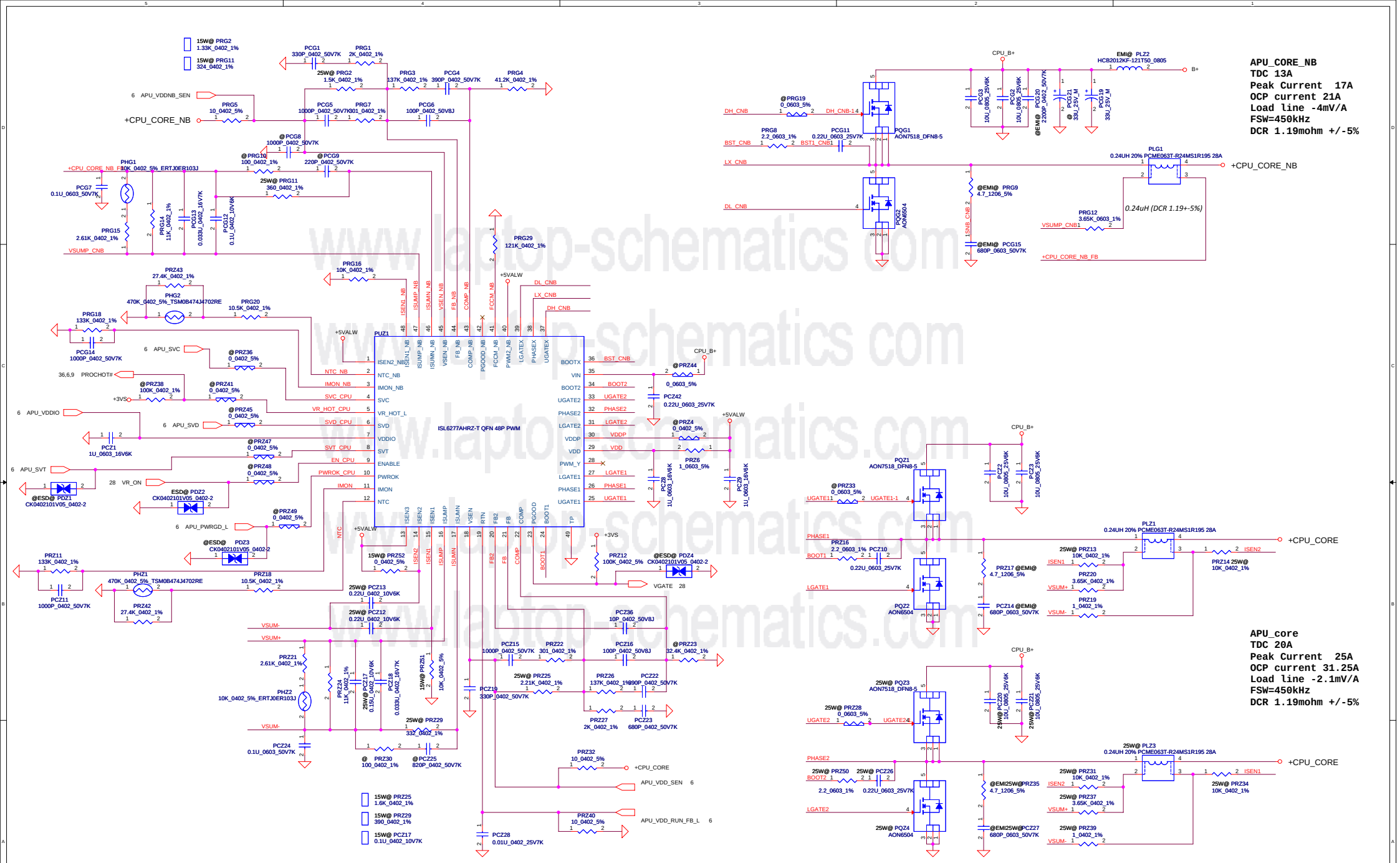

Security Classification	Compal Secret Data		
Issued Date	2012/11/07	Deciphered Date	2012/11/07

Compal Electronics, Inc.

Title: CPU_CORE/CPU_CORE_NB

Size: Custom | Document Number: LA-A996P | Rev: 0.1

Date: Tuesday, February 25, 2014 | Sheet 43 of 47

THIS SHEET OF ENGINEERING DRAWING IS THE PROPRIETARY PROPERTY OF COMPAL ELECTRONICS, INC. AND CONTAINS CONFIDENTIAL AND TRADE SECRET INFORMATION. THIS SHEET MAY NOT BE TRANSFERED FROM THE CUSTODY OF THE COMPETENT DIVISION OF R&D DEPARTMENT EXCEPT AS AUTHORIZED BY COMPAL ELECTRONICS, INC. NEITHER THIS SHEET NOR THE INFORMATION IT CONTAINS MAY BE USED BY OR DISCLOSED TO ANY THIRD PARTY WITHOUT PRIOR WRITTEN CONSENT OF COMPAL ELECTRONICS, INC.

+CPU_CORE

+CPU_CORE_NB

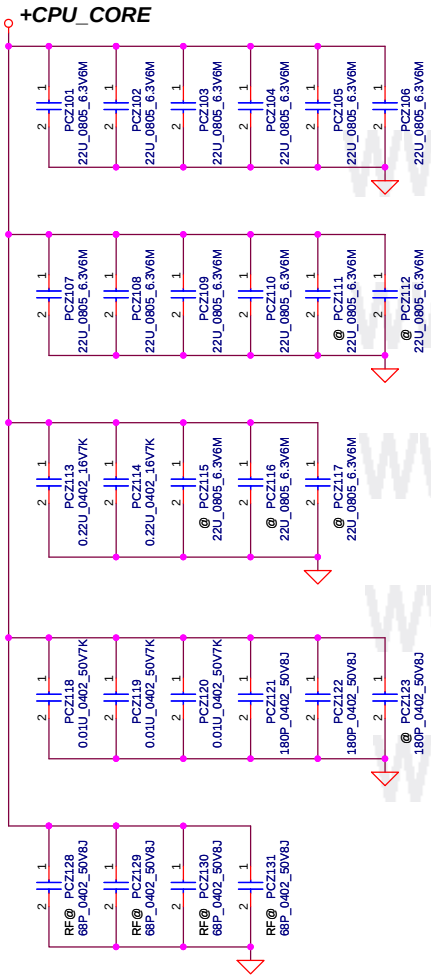

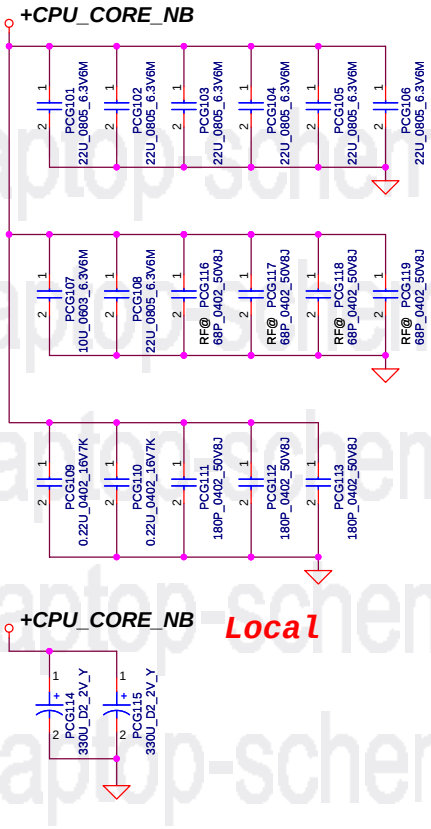

	330uF/9m	22uF/0805	0.22uF/0402	10uF/0603	0.01uF/0402	180pF/0402
+CPU_CORE	2	10	2		3	2
+CPU_CORE_NB	2	7	2	1		3

www.laptop-schematics.com

Security Classification	Compal Secret Data		
Issued Date	2012/11/07	Deciphered Date	

THIS SHEET OF ENGINEERING DRAWING IS THE PROPRIETARY PROPERTY OF COMPAL ELECTRONICS, INC. AND CONTAINS CONFIDENTIAL AND TRADE SECRET INFORMATION. THIS SHEET MAY NOT BE TRANSFERED FROM THE CUSTODY OF THE COMPETENT DIVISION OF R&D DEPARTMENT EXCEPT AS AUTHORIZED BY COMPAL ELECTRONICS, INC. NEITHER THIS SHEET NOR THE INFORMATION IT CONTAINS MAY BE USED BY OR DISCLOSED TO ANY THIRD PARTY WITHOUT PRIOR WRITTEN CONSENT OF COMPAL ELECTRONICS, INC.

Compal Electronics, Inc.

Title: PROCESSOR DECOUPLING

Size: A3 | Document Number: LA-A996P | Rev: 0.1

Date: Tuesday, February 25, 2014 | Sheet 44 of 47

GPIO21	GPIO29	GPIO30	GPIO20	GPIO15	
VID5	VID4	VID3	VID2	VID1	VDDC
0	1	1	1	1	1.125V
1	0	0	0	0	1.100V
1	0	0	0	1	1.075V
1	0	0	1	0	1.050V
1	0	0	1	1	1.025V
1	0	1	0	0	1.000V
1	0	1	0	1	0.975V
1	0	1	1	0	0.950V
1	0	1	1	1	0.925V
1	1	0	0	0	0.900V
1	1	0	0	1	0.875V
1	1	0	1	0	0.850V
1	1	0	1	1	0.825V
1	1	1	0	0	0.800V
1	1	1	0	1	0.775V

Vboot(merge)

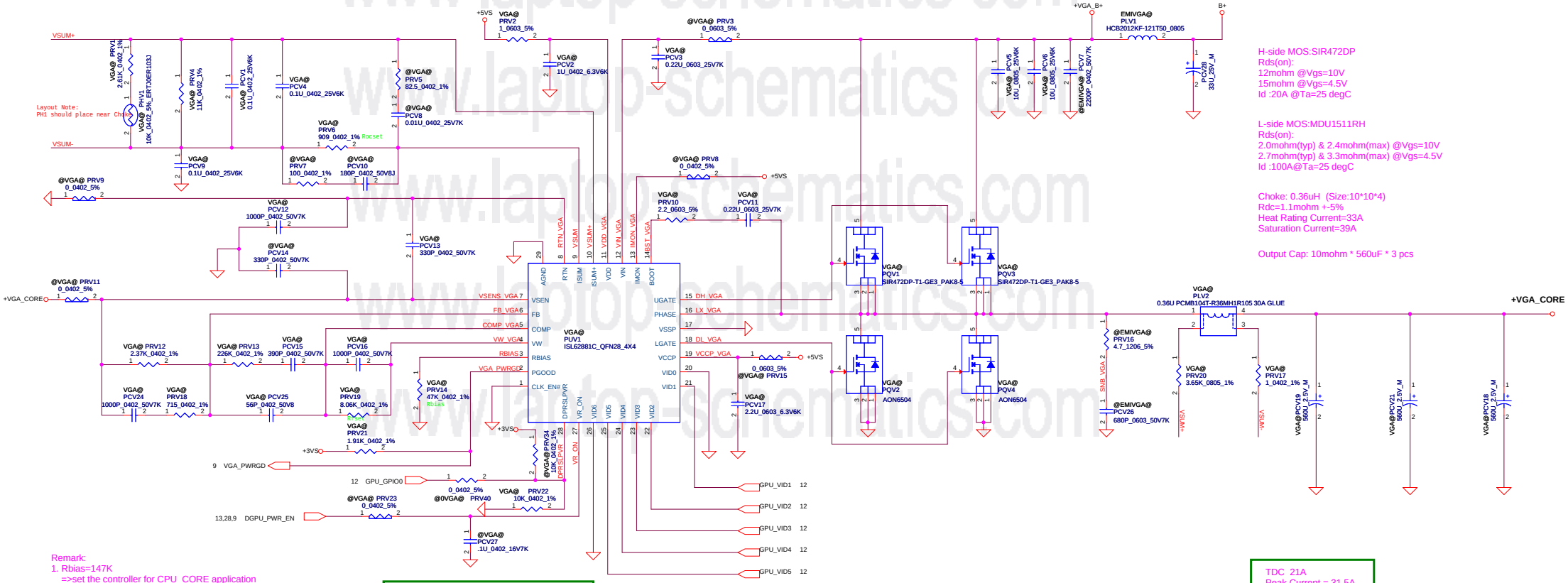

H-side MOS:SIR472DP
Rds(on):
12mohm @Vgs=10V
15mohm @Vgs=4.5V
Id :20A @Ta=25 degC

L-side MOS:MDU1511RH
Rds(on):
2.0mohm(typ) & 2.4mohm(max) @Vgs=10V
2.7mohm(typ) & 3.3mohm(max) @Vgs=4.5V
Id :100A@Ta=25 degC

Choke: 0.36uH (Size:10*10*4)
Rdc=1.1mohm +-5%
Heat Rating Current=33A
Saturation Current=39A

Output Cap: 10mohm * 560uF * 3 pcs

Remark:
1. Rbias=147K
=>set the controller for CPU_CORE application
Rbias=47k
=>set the controller for GPU_CORE application

2. Switching frequency setting:
Rfset(kohm)=[period(us)-0.29]*2.65
=8.06Kohm
Fsw=1/period(us)=300KHZ

3. Operation mode:
when GPU_CORE VR application
DPRSLPVR (pin28)=0 => 1 phase CCM mode
DPRSLPVR (pin28)=1 => 1 phase DE mode

Vboot regulation

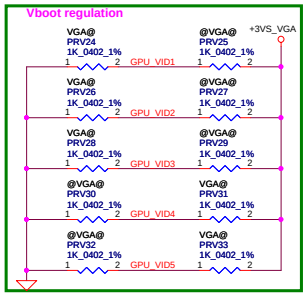

TDC 21A
Peak Current = 31.5A
OCP Current = 37.8A
Load line disable

Module model information:
ISL62881C_V1A for IC
ISL62881C_V1B for SW

Security Classification	Compal Secret Data		
Issued Date	2013/08/07	Deciphered Date	2016/08/06

THIS SHEET OF ENGINEERING DRAWING IS THE PROPRIETARY PROPERTY OF COMPAL ELECTRONICS, INC. AND CONTAINS CONFIDENTIAL AND TRADE SECRET INFORMATION. THIS SHEET MAY NOT BE TRANSFERED FROM THE CUSTODY OF THE COMPETENT DIVISION OF R&D DEPARTMENT EXCEPT AS AUTHORIZED BY COMPAL ELECTRONICS, INC. NEITHER THIS SHEET NOR THE INFORMATION IT CONTAINS MAY BE USED BY OR DISCLOSED TO ANY THIRD PARTY WITHOUT PRIOR WRITTEN CONSENT OF COMPAL ELECTRONICS, INC.

Compal Electronics, Inc.

Title: VGA_CORE

Size: Custom | Document Number: LA-A996P | Rev: 0.1

Date: Tuesday, February 25, 2014 | Sheet 45 of 47

www.laptop-schematics.com

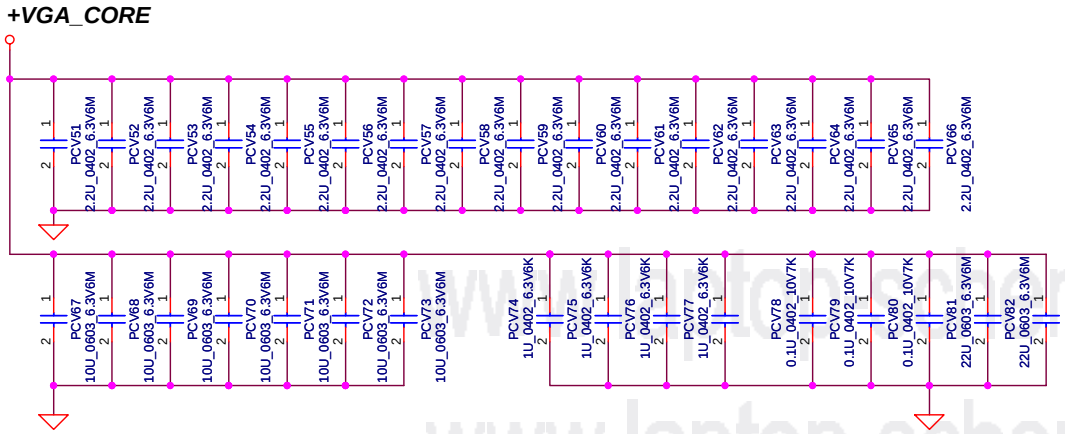

www.laptop-schematics.com

Security Classification	Compal Secret Data		
Issued Date	2013/08/07	Deciphered Date	2016/08/06

THIS SHEET OF ENGINEERING DRAWING IS THE PROPRIETARY PROPERTY OF COMPAL ELECTRONICS, INC. AND CONTAINS CONFIDENTIAL AND TRADE SECRET INFORMATION. THIS SHEET MAY NOT BE TRANSFERED FROM THE CUSTODY OF THE COMPETENT DIVISION OF R&D DEPARTMENT EXCEPT AS AUTHORIZED BY COMPAL ELECTRONICS, INC. NEITHER THIS SHEET NOR THE INFORMATION IT CONTAINS MAY BE USED BY OR DISCLOSED TO ANY THIRD PARTY WITHOUT PRIOR WRITTEN CONSENT OF COMPAL ELECTRONICS, INC.

Compal Electronics, Inc.

Title: VGA CHIP DECOUPLING

Size: B | Document Number: LA-A996P | Rev: 0.1

Date: Tuesday, February 25, 2014 | Sheet 46 of 47

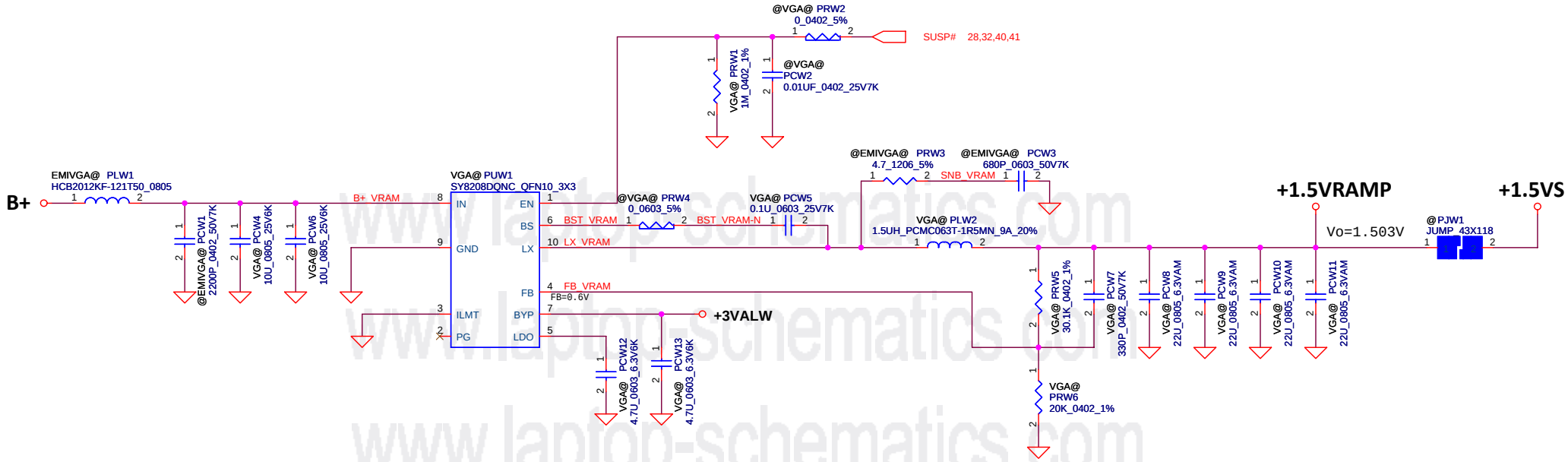

www.laptop-schematics.com

Security Classification	Compal Secret Data		
Issued Date	2013/08/07	Deciphered Date	2016/08/06

THIS SHEET OF ENGINEERING DRAWING IS THE PROPRIETARY PROPERTY OF COMPAL ELECTRONICS, INC. AND CONTAINS CONFIDENTIAL AND TRADE SECRET INFORMATION. THIS SHEET MAY NOT BE TRANSFERED FROM THE CUSTODY OF THE COMPETENT DIVISION OF R&D DEPARTMENT EXCEPT AS AUTHORIZED BY COMPAL ELECTRONICS, INC. NEITHER THIS SHEET NOR THE INFORMATION IT CONTAINS MAY BE USED BY OR DISCLOSED TO ANY THIRD PARTY WITHOUT PRIOR WRITTEN CONSENT OF COMPAL ELECTRONICS, INC.

Compal Electronics, Inc.

Title: **VRAM Power**

Size: B | Document Number | Rev: 0.1

Date: Tuesday, February 25, 2014 | Sheet 47 of 47